Listing and Technical Evaluation Report™

A Duly Authenticated Report from an Approved Agency

Report No: 0910-01

Issue Date: October 20, 2009

Revision Date: April 14, 2026

Subject to Renewal: April 1, 2027

QuickTie™ System (QTS)

Trade Secret Report Holder:

QuickTie™ Products, Inc.

Phone: 904-281-0525 Website: quicktieproducts.com Email: info@quicktieproducts.com

CSI Designations:

DIVISION: 06 00 00 - WOOD, PLASTICS AND COMPOSITES Section: 06 05 23 - Wood, Plastic, and Composite Fastenings

1 Innovative Products Evaluated[1]

1.1 QuickTie System (QTS):

- 1.1.1 QTB(L) Blue $^{3}/_{16}$" QuickTie
- 1.1.2 QTG(L) Green $^{1}/_{4}$" QuickTie
- 1.1.3 QTO(L) Orange $^{5}/_{16}$" QuickTie
- 1.1.4 QTR(L) Red $^{3}/_{8}$" QuickTie

1.2 Quick Connectors:

- 1.2.1 CS20-250, CS18-200, CS16-150, and CS14-100 Coiled Straps
- 1.2.2 CMST16-54, CMST14-52.5, and CMST12-40 Coiled Straps
- 1.2.3 FASA4 Foundation Anchor Strap
- 1.2.4 FSTHD8, FSTHD8J, FSTHD10, FSTHD10J, FSTHD14, and FSTHD14J Foundation Strap-Tie Hold Downs
- 1.2.5 HA4, HA6, HA8, and HA10 Hurricane and Seismic Anchors
- 1.2.6 HDTT45 and HDTT6 Hold Downs
- 1.2.7 HD5, HD7, HD8, HD11, HD14, HD15/20, and HD22 Hold Downs
- 1.2.8 HGA and HGAM Gusset Angles
- 1.2.9 LTT20 Light Tension Tie
- 1.2.10 METAS and HETAS Embedded Anchor Straps
- 1.2.11 MS and LS Flat Straps
- 1.2.12 LTS, MTS, and HTS Twist Straps
- 1.2.13 PAS18-3Z, PAS23-3Z, PAS28-3Z, PAS35-3Z, and PAS51-3Z Purlin Anchor Straps
- 1.2.14 PBA44, PBA46, PBA66, PBA77, and PBA88 Post Base Anchors
- 1.2.15 PBA44-4P/6P and PBA66-4P/6P Porch Post Base Anchors
- 1.2.16 PCM and EPCM Post Caps

RYAN JOSEPH DEXTER LICENSE No 69484 STATE OF FLORIDA PROFESSIONAL ENGINEER

DrJ Engineering, LLC
#29766
4/18/2026

Digitally signed by RYAN J DEXTER
Date: 2026.04.16 16:41:15 -04'00'

Information contained in this report was developed using report holder's confidential intellectual property (IP) and trade secrets (TS), which is protected by Defend Trade Secrets Act 2016, © DrJ Engineering, LLC

1.2.17 PCS and PCES Post Cap Connectors

1.2.18 PHGT2, PHHGT3, and PHHGT4 Girder Tie-Downs

1.2.19 QGC and QGCW QuickTie Girder Connectors

1.2.20 SC34, SC35 Framing Angles, and SC35F Framing Plates

1.2.21 SPArtan Sill Plate Anchor

1.2.22 TCC16L, TCC16R, TCC21L, and TCC21R Drag Strut Connectors

1.2.23 TCS18-3Z and TCS20-3Z Tension-Compression Straps

1.2.24 TR1 and TR2 Roof Truss Clips

1.2.25 RSPT4, RSPT6, RSPT6-2, and RSPT6M Stud Plate Tie

1.3 QuickTie Screws:

1.3.1 SWH Hex Head Screw

1.3.2 SWF Flat Head Screw

1.3.3 SWT Truss/Stud Screw

1.3.4 SWL Fillister Head Screw

1.4 QuickTie Adhesives:

1.4.1 QE-1 Epoxy Adhesive

1.4.2 QE-2 Epoxy Adhesive

2 Product Description and Materials

2.1 *QTS Description*

2.1.1 The QTS is a wall anchoring system for conventional light-frame construction and masonry projects.

2.1.1.1 For use of the QTS wall anchoring system in masonry construction, see Report Number 1404-06.

2.1.1.2 For use of the QTS wall anchoring system in portal frames, see Report Number 1506-20.

2.1.2 The QTS provides a continuous load path from the top of the wall to the foundation by resisting and transferring wind uplift and/or laterally applied loads that result in overturning uplift forces.

2.1.3 The QTS consists of a galvanized aircraft wire rope (cable) with threaded studs swaged to each end.

2.1.4 *Primary Connection (Epoxy):*

2.1.4.1 *Description:*

2.1.4.1.1 QuickTie cable with threaded stud at the bottom is connected to the foundation via a formed or drilled hole in the foundation. The hole is filled with epoxy and the QuickTie cable is inserted into the hole and left to set.

2.1.4.1.2 The other end of QuickTie with a threaded stud is extended vertically within the wood stud wall to the top of the wall, inserted through a hole drilled through the wood top plate(s), and attached to a steel plate washer using a nut. The nut is tightened to post-tension the QTS.

2.1.4.2 *Approved Epoxy Products for Use with QTS:*

2.1.4.2.1 *QuickTie QE-1 and QuickTie QE-2:*

2.1.4.2.1.1 QE-1 and QE-2 epoxy adhesives are an injectable two-component adhesive for use in both cracked and uncracked normal-weight concrete applications.

2.1.4.2.1.2 QE-1 and QE-2 epoxy adhesives may be used for various anchoring systems, including QuickTie System (the threaded rod anchors), and deformed reinforcing bars (rebar).

Information contained in this report was developed using report holder's confidential intellectual property (IP) and trade secrets (TS), which is protected by Defend Trade Secrets Act 2016, © DrJ Engineering, LLC

2.1.4.2.1.3 QE-1 and QE-2 epoxy adhesives and associated accessories are shown in **Figure 1**.

2.1.4.2.1.4 See code reports for QE-1 and QE-2, and/or contact manufacturer for more details.

Figure 1. QuickTie Epoxy Adhesive Products and Accessories

2.1.5 *Alternative Connection (Mechanical):*

2.1.5.1 QuickTie cable with threaded stud at the bottom is connected to the foundation via a cast-in-place embedded anchor bolt or embedded steel plate with headed studs. The QuickTie cable is attached to the embedded anchor bolt or steel plate by a mechanical coupling.

2.1.5.2 The other end of QuickTie cable with threaded stud is extended vertically within the wood stud wall to the top of the wall, inserted through a hole drilled through the wood top plate(s) and attached to a steel plate washer using a nut. The nut is tightened to post-tension the QTS.

2.1.6 Trusses, headers, and bottom plates are connected with Quick Connectors (See **Section 1.2**) to provide distribution of load through the QTS to the foundation.

2.1.7 Where one QuickTie cable does not provide sufficient capacity, multiple cables of the same type may be installed to increase the pre-stressing force and transfer accumulated loads to the foundation.

2.2 The innovative products evaluated in this report are shown in **Figure 2** through **Figure 44**.

Information contained in this report was developed using report holder's confidential intellectual property (IP) and trade secrets (TS), which is protected by Defend Trade Secrets Act 2016, © DrJ Engineering, LLC

2.3 *QTS – Types and Materials*

2.3.1 The QTS consists of the following wood frame QuickTie, QTX(L), where *"X"* is the QuickTie type/cable diameter and *"L"* is the length in feet:

2.3.1.1 *QTB(L) – QuickTie Blue:* $^{3}/_{16}$" diameter made of 7 x 19, galvanized steel wire rope with a minimum breaking force of 4,200 lbs per ASTM A1023. Refer to **Figure 2** for the details of swaged threaded studs, steel plate washer, and nut.

QTB
Blue

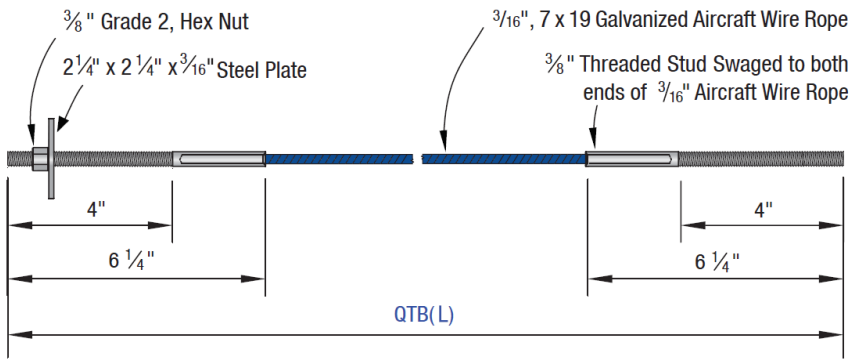

Figure 2. Typical QuickTie Part Detail – QTB(L) Blue $^{3}/_{16}$" Diameter

2.3.1.2 *QTG(L) – QuickTie Green:* $^{1}/_{4}$" diameter made of 7 x 19 galvanized steel wire rope with a minimum breaking force of 7,000 lbs per ASTM A1023. Refer to **Figure 3** for the details of swaged threaded studs, steel plate washers, and nut.

QTG
Green

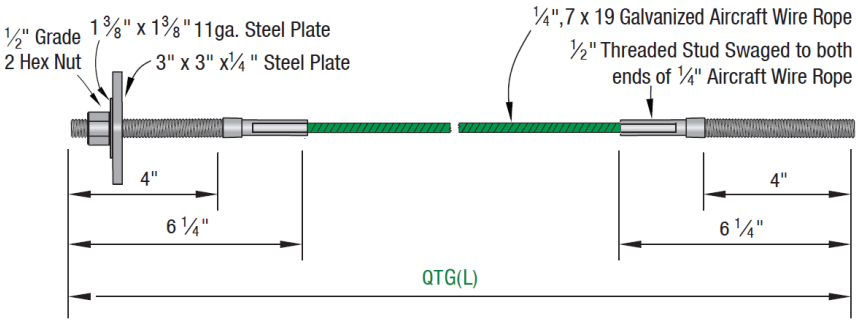

Figure 3. Typical QuickTie Part Detail – QTG(L) Green $^{1}/_{4}$" Diameter

Information contained in this report was developed using report holder's confidential intellectual property (IP) and trade secrets (TS), which is protected by Defend Trade Secrets Act 2016, © DrJ Engineering, LLC

2.3.1.3 *QTO(L) – QuickTie Orange:* $^5/_{16}$" diameter made of 7 x 19, galvanized steel wire rope with a minimum breaking force of 9,800 lbs per ASTM A1023. Refer to **Figure 4** for the details of swaged threaded studs, steel plate washers, and nut.

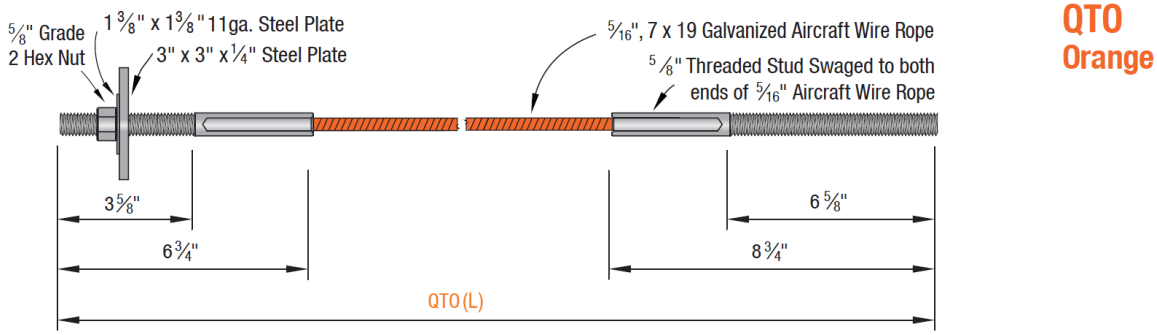

Figure 4. Typical QuickTie Part Detail – QTO(L) Orange $^5/_{16}$" Diameter

2.3.1.4 *QTR(L) – QuickTie Red:* $^3/_8$" diameter made of 7 x 19, galvanized steel wire rope with a minimum breaking force of 14,400 lbs per ASTM A1023. Refer to **Figure 5** for the details of swaged threaded studs, steel plate washer, and nut.

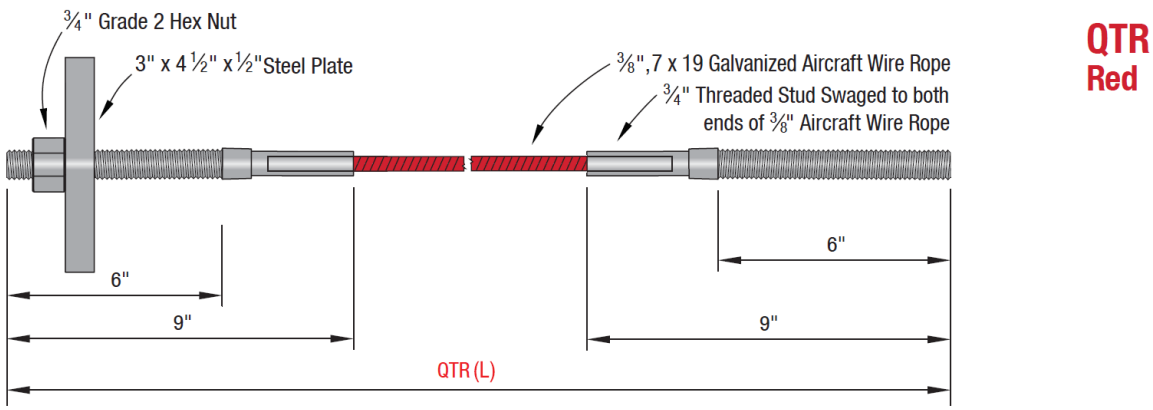

Figure 5. Typical QuickTie Part Detail – QTR(L) Red $^3/_8$" Diameter

2.3.2 Individual wires of the rope (cable) are 0.030" diameter or smaller, with a minimum F_u = 268,000-psi and galvanized with a minimum of 0.10 ounces per square foot of uncoated wire surface.

2.3.3 The steel plate washers are made of ASTM A36 or ASTM A653 Grade 33 steel, with a minimum yield and ultimate strengths of 33-ksi and 45-ksi, respectively.

2.3.4 The hex nuts are made of SAE J995 Grade 2 or equivalent material.

2.3.5 The length of QTS varies in 1" increments from 2' to 62'.

2.3.6 **Table 2** lists the allowable tensile loads (ASD basis) of the QTS.

Information contained in this report was developed using report holder's confidential intellectual property (IP) and trade secrets (TS), which is protected by Defend Trade Secrets Act 2016, © DrJ Engineering, LLC

2.3.7 *Tension Indicator Device:*

2.3.7.1 Tension Indicator Devices (TID) are inserted between the steel plate washer and the hex nut for visually identifying the pre-tension in the cable. TID are made from the following materials:

2.3.7.1.1 *Blue:* ASTM A653, Grade 33 structural steel, 14-gauge, minimum thickness 0.0821", painted.

2.3.7.1.2 *Green:* ASTM A653, Grade 33 structural steel, 12-gauge, minimum thickness 0.1120", painted.

2.3.7.1.3 *Orange:* ASTM A653, Grade 33 structural steel, 10-gauge, minimum thickness 0.1419", painted.

2.3.7.1.4 *Red:* ASTM A653, Grade 33 structural steel, 8-gauge, minimum thickness 0.1718", painted.

2.4 *Quick Connectors Description*

2.4.1 Trusses, joists, rafters, headers, beams, studs, and plates are connected with manufactured Quick Connector anchors and straps to provide a load path from the roof through to the foundation.

2.4.2 *Quick Connectors:*

2.4.2.1 *HA4, HA6, HA8, and HA10 Hurricane and Seismic Anchors:*

2.4.2.1.1 These 18-gauge (minimum thickness with coating 0.0466") steel clips are used to fasten rafters and trusses to wall top plates. The clips resist uplift loads and forces applied parallel to and perpendicular to the top plates. The HA4 clip is $4^1/_2$" long, the HA6 clip is $6^1/_4$" long, the HA8 is 8", and the HA10 is $6^1/_2$" in length. The clips are manufactured from ASTM A653 Structural Steel, Grade 50, Class 3 (F_u = 70-ksi, F_y = 50-ksi) steel galvanized with a G90 or better zinc coating (**Figure 6** and **Figure 7**). See **Table 4**, **Table 5**, **Table 6**, and **Table 7** for fastening schedules and allowable loads.

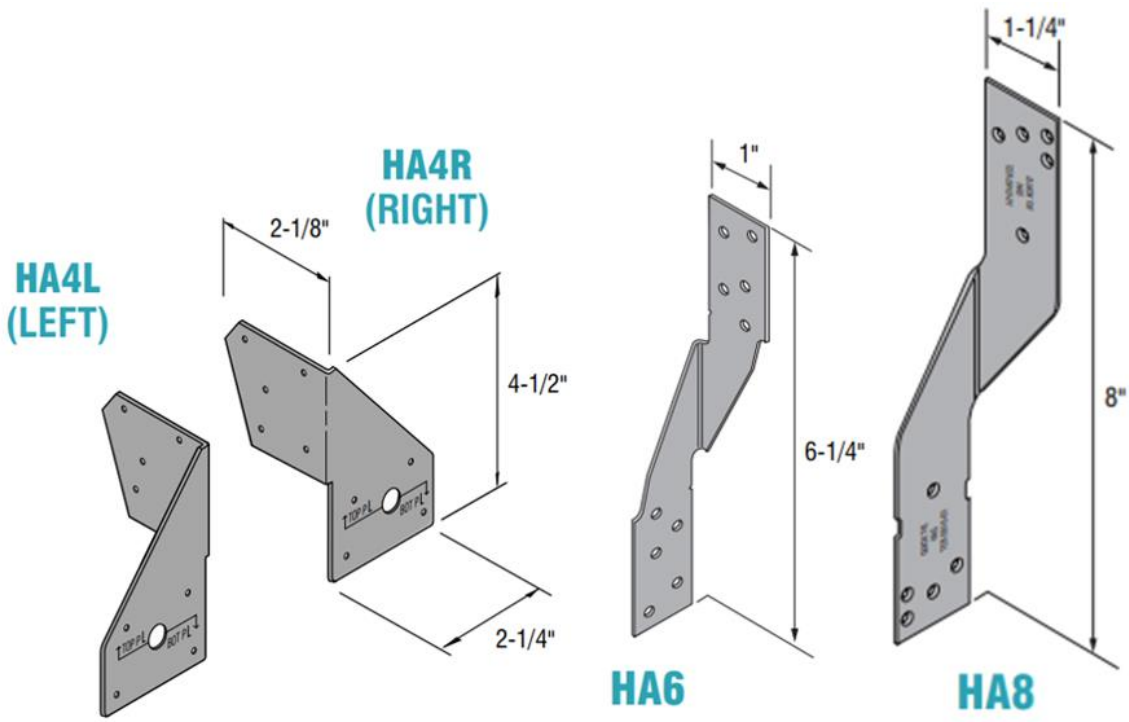

Figure 6. HA4, HA6, and HA8 Hurricane/Seismic Anchors

Information contained in this report was developed using report holder's confidential intellectual property (IP) and trade secrets (TS), which is protected by Defend Trade Secrets Act 2016, © DrJ Engineering, LLC

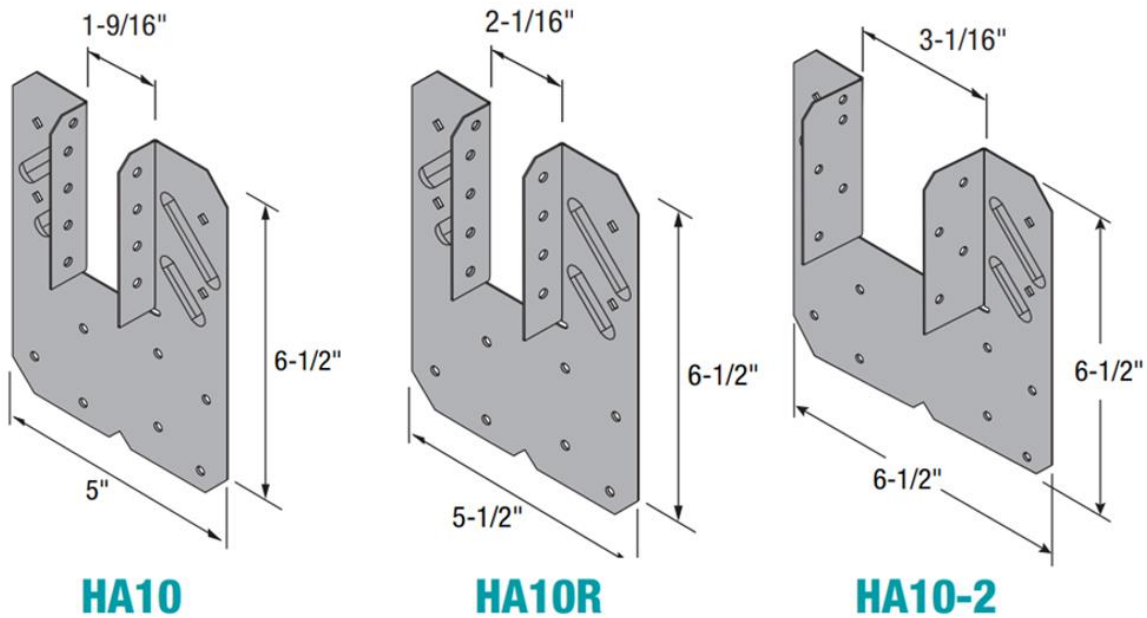

Figure 7. HA10 Hurricane/Seismic Anchor

2.4.2.2 *LS and MS Series Flat Straps:*

2.4.2.2.1 Light Straps (LS) are 20-gauge (minimum thickness with coating 0.0356") steel. Medium Straps (MS) are 16-gauge (0.0575") steel. The straps are manufactured in lengths varying from $9^5/_8$" to $48^5/_8$". Each strap is $1^1/_4$" wide with nail holes punched at intervals of $1^1/_2$" along its length. The nail holes are staggered across the width of the strap. At the mid-length of each strap is a 3" long area without any holes. The purpose of this space is to provide a distance of $1^1/_2$" between the joint in the wood being joined and the first nail hole on either side of the joint. The last three nails on each end of the strap are spaced $^3/_4$" apart and are staggered across the width of the strap. The straps are manufactured from ASTM A653 Structural Steel, Grade 50, Class 3 (F_u = 70-ksi, F_y = 50-ksi) steel galvanized with a G90 or better zinc coating (see **Figure 8**). See **Table 8** and **Table 9** for fastening schedules and allowable tension loads.

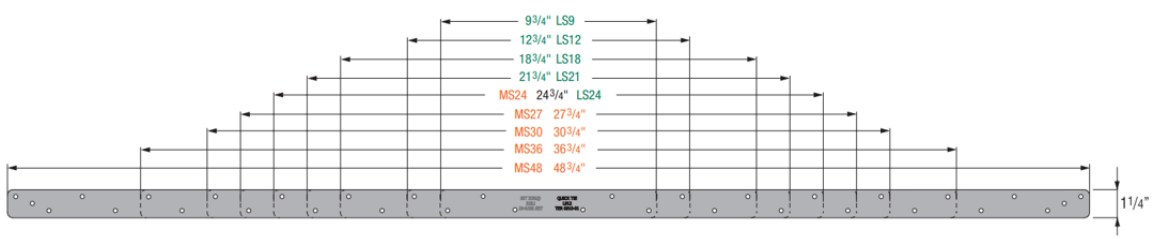

Figure 8. LS and MS Flat Strap

Information contained in this report was developed using report holder's confidential intellectual property (IP) and trade secrets (TS), which is protected by Defend Trade Secrets Act 2016, © DrJ Engineering, LLC

2.4.2.3 *LTS, MTS, and HTS Series Twist Straps:*

2.4.2.3.1 Light Twist Straps (LTS) are manufactured in lengths of 12", 16", 18", and 20". Medium Twist Straps (MTS) are manufactured in lengths of 12", 16", 20", and 24". Heavy Twist Straps (HTS) are manufactured in lengths of 16", 20", 24", and 28". The straps have an offset shape to allow for twisting and bending. Each strap is $1^1/_4$" wide with nail holes punched at intervals of 1" along its length. The nail holes are staggered across the width of the strap. The LTS12-3Z, LTS16-3Z, LTS18-3Z, and LTS20-3Z are 18-gauge (minimum thickness with coating 0.0466"). The MTS12 3Z, MTS16-3Z, MTS20-3Z, and MTS24-3Z are 16-gauge (minimum thickness with coating 0.0575"). The HTS16-3Z, HTS20-3Z, HTS24-3Z, and HTS28-3Z are 14-gauge (minimum thickness with coating 0.0705"). The straps are manufactured from minimum ASTM A653 Structural Steel, Grade 50, Class 3 (F_u = 70-ksi, F_y = 50-ksi) steel galvanized with a G90 or better zinc coating (see **Figure 9**). See **Table 10**, **Table 11**, and **Table 12** for fastening schedules and allowable tension loads.

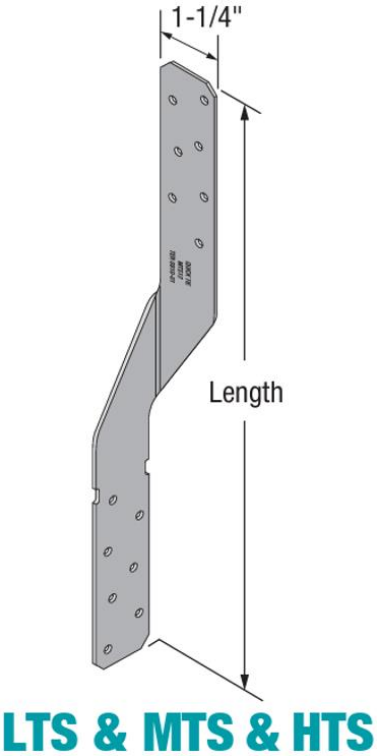

Figure 9. LTS, MTS, and HTS Twist Strap

Information contained in this report was developed using report holder's confidential intellectual property (IP) and trade secrets (TS), which is protected by Defend Trade Secrets Act 2016, © DrJ Engineering, LLC

2.4.2.4 *CS20-250, CS18-200, CS16-150, and CS14-100 Coiled Straps:*

2.4.2.4.1 Coiled Straps (CS) are either 20-gauge (CS20-250, minimum thickness with coating 0.0356") steel, 18-gauge (CS18-200, minimum thickness with coating 0.0466") steel, 16-gauge (CS16-150, minimum thickness with coating 0.0575") steel, or 14-gauge (CS14-100, minimum thickness with coating 0.0705") steel. Each strap is $1^1/_4$" wide with 0.177" diameter nail holes punched at $^3/_4$" intervals along its length. The straps are manufactured from ASTM A653 Grade 50, Class 3 (F_u = 70-ksi, F_y = 50-ksi) steel galvanized with a G90 or better zinc coating. The CS20-250 is manufactured from a 250' coil, the CS18-200 is manufactured from a 200' coil, the CS16-150 is manufactured from a 150' coil and the CS14-100 is manufactured from a 100' coil (see **Figure 10**). See **Table 13**, **Table 14**, **Table 15**, and **Table 16** for fastening schedules and allowable tension loads.

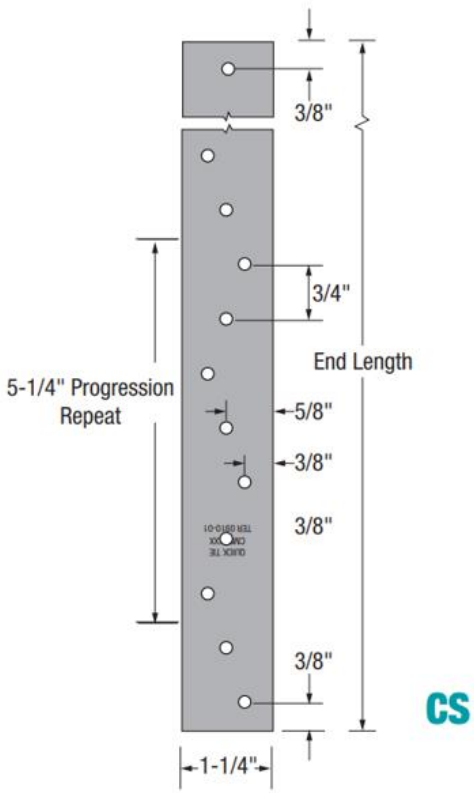

Figure 10. CS20-250, CS18-200, CS16-150, and CS14-100 Coiled Straps

Information contained in this report was developed using report holder's confidential intellectual property (IP) and trade secrets (TS), which is protected by Defend Trade Secrets Act 2016, © DrJ Engineering, LLC

2.4.2.5 *CMST16-54, CMST14-52.5, and CMST12-40 Coiled Straps:*

2.4.2.5.1 Coiled Straps (CMST) are either 16-gauge (CMST16-54, minimum thickness with coating 0.0575") steel, 14-gauge (CMST14-52.5, minimum thickness with coating 0.0705") steel, or 12-gauge (CMST12-40, minimum thickness with coating 0.0994") steel. Each strap is 3" wide, with 0.177" diameter nail holes punched at $1^1/_2$" intervals along its length (see **Figure 11**). The straps are manufactured from ASTM A653 Structural Steel, Grade 50, Class 3 (F_u = 70-ksi, F_y = 50-ksi) steel galvanized with a G90 or better zinc coating. The CMST16-54 is manufactured from a 54' coil, the CMST14-52.5 is manufactured from a 52.5' coil and the CMST12-40 is manufactured from a 40' coil. See **Table 17**, **Table 18**, and **Table 19** for fastening schedules and allowable tension loads.

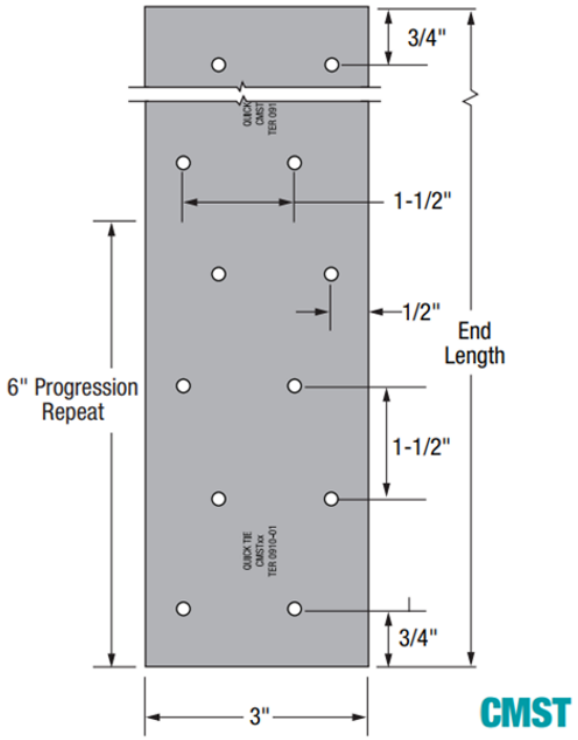

Figure 11. CMST16-54, CMST14-52.5, and CMST12-40 Coiled Straps

Information contained in this report was developed using report holder's confidential intellectual property (IP) and trade secrets (TS), which is protected by Defend Trade Secrets Act 2016, © DrJ Engineering, LLC

2.4.2.6 *SC34 and SC35 Framing Angle and SC35F Framing Plate:*

2.4.2.6.1 The SC34 and SC35 anchor floor and ceiling joists to headers while the SC35F anchors solid blocking to top plates. The SC34 and SC35 use a 90° framing angle to join posts to beams and to make other right-angle connections. The anchors are 18-gauge (0.0466") steel manufactured from ASTM A653 Structural Steel, Grade 50, Class 3 (F_u = 70-ksi, F_y = 50-ksi) steel galvanized with a G90 or better zinc coating (see **Figure 12** and **Figure 13**). See the notes in **Table 20**, **Table 21**, and **Table 22** for fastening schedules.

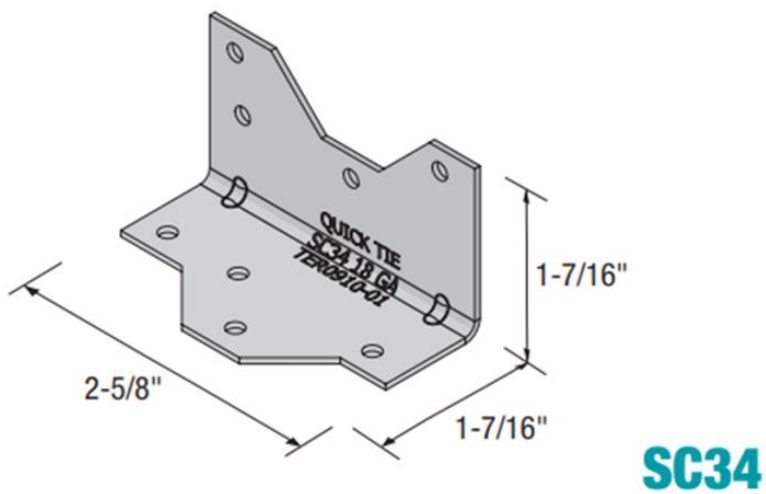

Figure 12. SC34 Framing Angle

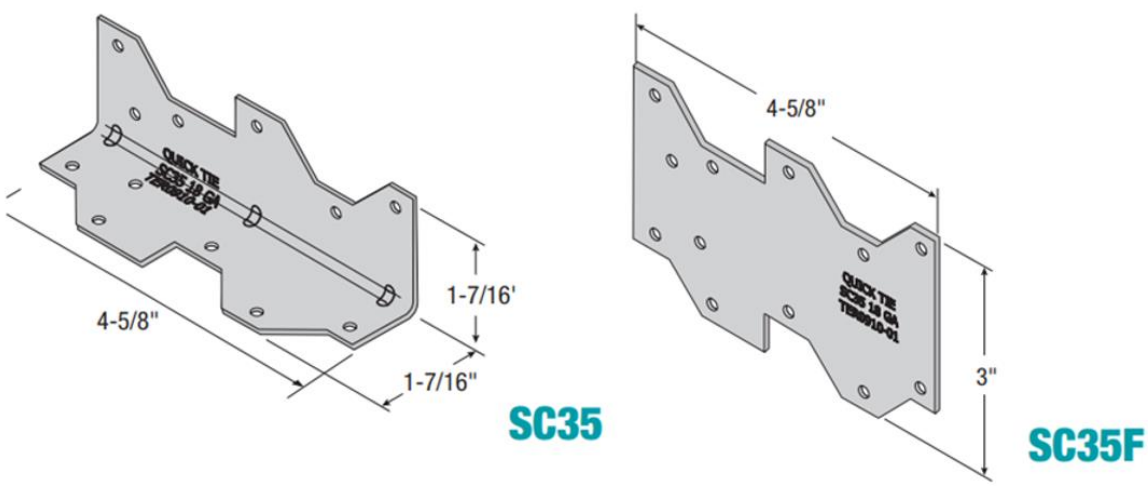

Figure 13. SC35 Framing Angle and SC35F Framing Plate

Information contained in this report was developed using report holder's confidential intellectual property (IP) and trade secrets (TS), which is protected by Defend Trade Secrets Act 2016, © DrJ Engineering, LLC

2.4.2.7 *HGA and HGAM Gusset Angles:*

2.4.2.7.1 The HGA and HGAM are 90° framing angles used to connect truss/rafter joists to wall top plates (HGA) and the top of masonry walls (HGAM). The HGA and HGAM are 14-gauge (minimum thickness with coating is 0.0705") steel manufactured from ASTM A653 Structural Steel, Grade 50, Class 3 (F_u = 70-ksi, F_y = 50-ksi) steel galvanized with a G90 or better zinc coating (see **Figure 14**). The HGA is anchored to the joist with four $^1/_4$" diameter x $1^1/_2$" long screws and to the top plate with four $^1/_4$" diameter x 3" long screws. The HGAM is anchored to the joist with four $^1/_4$" diameter x $1^1/_2$" long screws and to the masonry block wall with four $^1/_4$" x $2^1/_4$" concrete screws. See the notes in **Table 23** for minimum screw requirements.

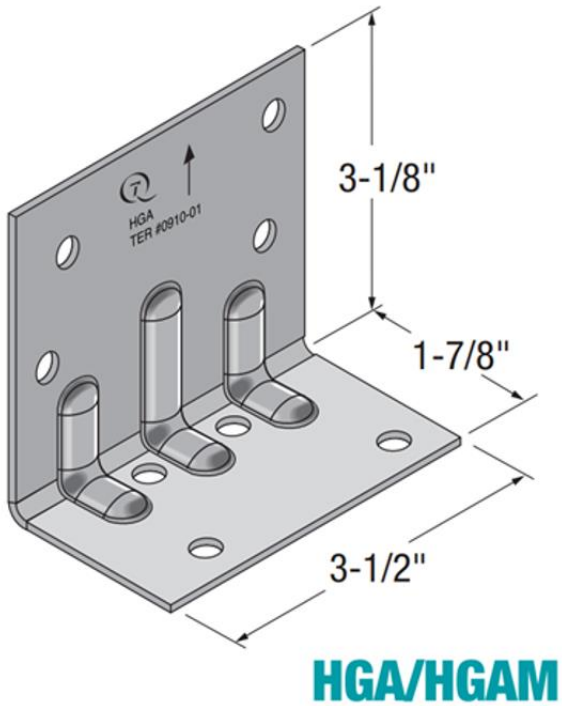

Figure 14. HGA and HGAM Gusset Angle

Information contained in this report was developed using report holder's confidential intellectual property (IP) and trade secrets (TS), which is protected by Defend Trade Secrets Act 2016, © DrJ Engineering, LLC

2.4.2.8 *Post Base Anchor (PBA):*

2.4.2.8.1 Post Base Anchors (PBA) are used to attach the base of a wood post to a concrete foundation. The PBAs are comprised of a Post Base Strap and Stand-Off (SO) Plate (see **Figure 15** and **Figure 16**). The SO Plate is designed to provide a 1" clearance between the bottom of the wood post and top of foundation in order to meet IBC Section 2304.12 and IRC Section R304[2] requirements for protection of wood-based products against decay. The PBA Post Base Strap and SO Plate are 12-gauge steel (minimum thickness with coating is 0.0994"). The PBA66 Post Base Strap is also available in 10-gauge steel (minimum thickness with coating is 0.1250"). The PBA is manufactured from ASTM A653 Structural Steel, Grade 50, Class 3 (F_u = 70-ksi, F_y = 50-ksi) steel galvanized with G185 (minimum) zinc coating. See **Table 24** for fastening schedules.

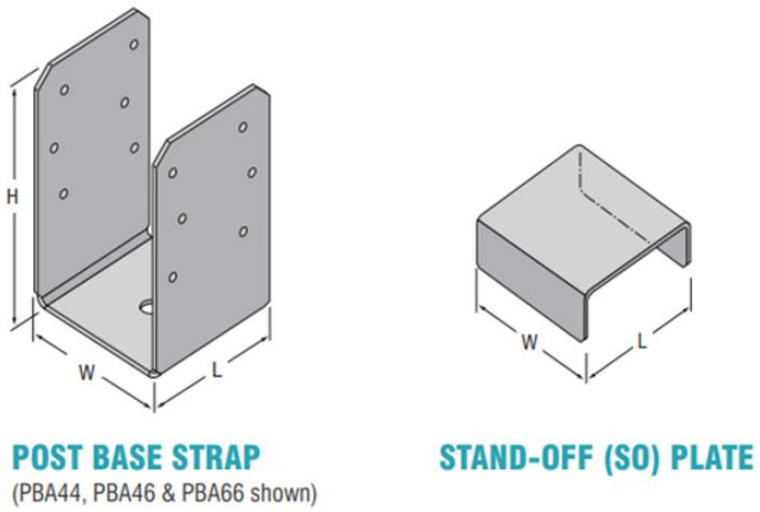

Figure 15. PBA44, PBA46, and PBA66

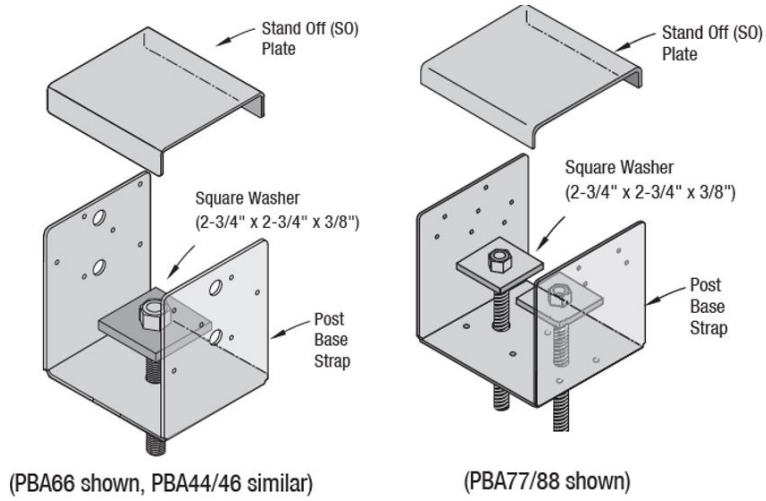

Figure 16. PBA66, PBA77, and PBA88

Information contained in this report was developed using report holder's confidential intellectual property (IP) and trade secrets (TS), which is protected by Defend Trade Secrets Act 2016, © DrJ Engineering, LLC

2.4.2.9 *PBA44-4P/6P and PBA66-4P/6P Porch Post Base Anchors:*

2.4.2.9.1 PBA44-4P/6P and PBA66-4P/6P Porch Post Base Anchors, shown in **Figure 17**, are used to attach the base of a wood post to a concrete foundation. These anchors are designed to withstand vertical construction loads prior to embedment of concrete and to support permanent porch framing throughout all stages of construction. PBA44-4P/6P and PBA66-4P/6P are manufactured from 12-gauge (minimum thickness with coating 0.0994") ASTM A653 Grade 50, Class 3 Structural Steel (F_u = 70-ksi, F_y = 50-ksi). See **Table 25** for fastening schedules and design values.

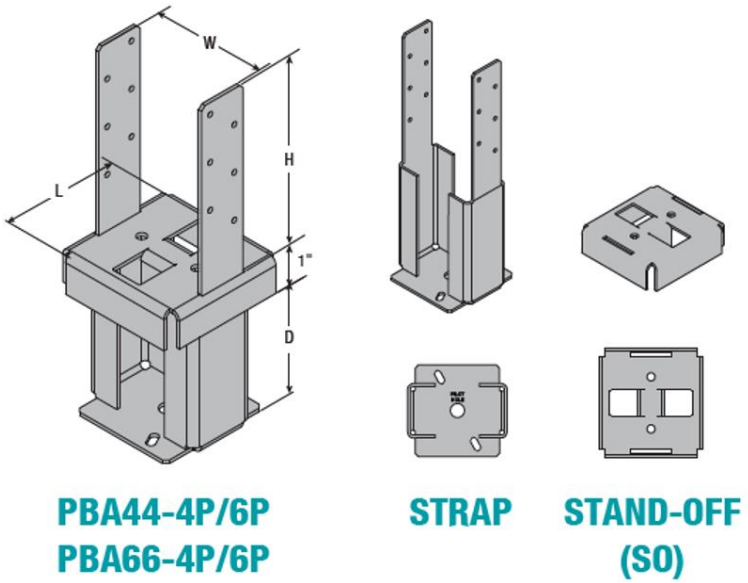

Figure 17. PBA44-4P/6P (Left) and PBA66-4P/6P (Right) Porch Post Base Anchor

Information contained in this report was developed using report holder's confidential intellectual property (IP) and trade secrets (TS), which is protected by Defend Trade Secrets Act 2016, © DrJ Engineering, LLC

2.4.2.10 *SPArtan Sill Plate Anchor:*

2.4.2.10.1 SPArtan Sill Plate Anchors are post-installed anchors used to attach the sill plate of a wood framed wall to a concrete foundation. SPArtan anchors are designed to resist shear and tension loads due to wind and seismic forces. SPArtan anchors are $7^1/_2$" long and manufactured from AISI 1018 carbon steel, Hot-Dipped Galvanized (HDG) or equivalent, to meet ASTM A153, Class C. The diameter of the portion of the anchor that embeds in concrete is $^3/_8$". The diameter of the portion of the anchor in contact with the sill plate is $^5/_8$" (see **Figure 18** and **Figure 19**). SPArtan anchors are compliant with IBC Section 1901.3. See **Table 26** for allowable shear and tension resistance values.

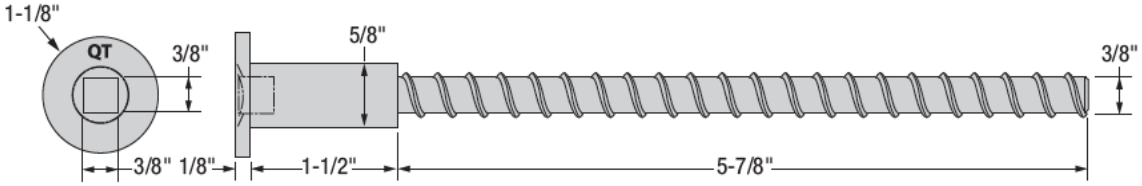

Figure 18. SPArtan Sill Plate Anchor Measurements

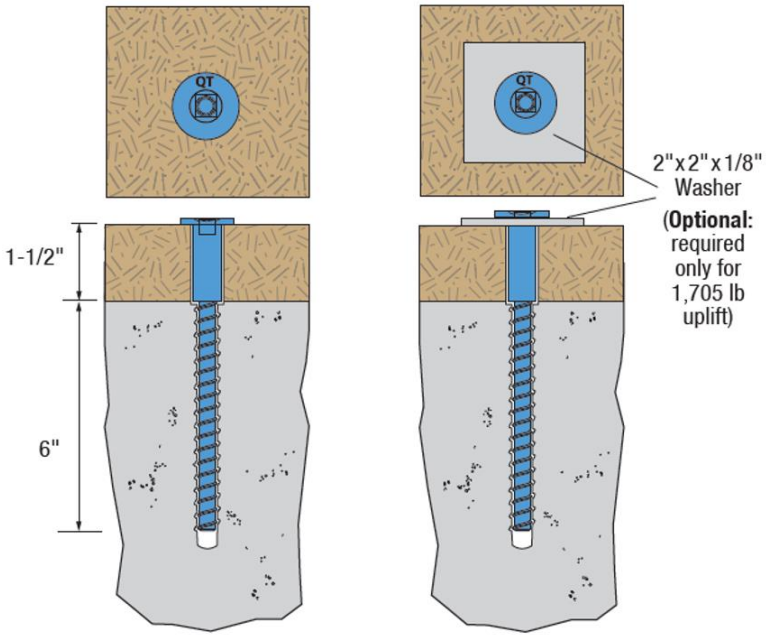

Figure 19. SPArtan Sill Plate Anchor Section and Plan Views

Information contained in this report was developed using report holder's confidential intellectual property (IP) and trade secrets (TS), which is protected by Defend Trade Secrets Act 2016, © DrJ Engineering, LLC

2.4.2.11 *Post Cap (PCM) and End Post Cap (EPCM):*

2.4.2.11.1 PCM and EPCM connectors are used for post-to-beam connection applications. PCM and EPCM are designed to resist uplift and shear loads due to wind and seismic forces. The PCM and EPCM are 16-gauge (minimum thickness with coating is 0.0575") and 12-gauge (minimum thickness with coating is 0.0994") steel manufactured from ASTM A653 Structural Steel, Grade 50, Class 3 (F_u = 70-ksi, F_y = 50-ksi) steel galvanized with G185 (minimum) zinc coating (**Figure 20**). The PCM and EPCM are attached to the post and beam with 16d nails. See **Table 27** for fastener schedules.

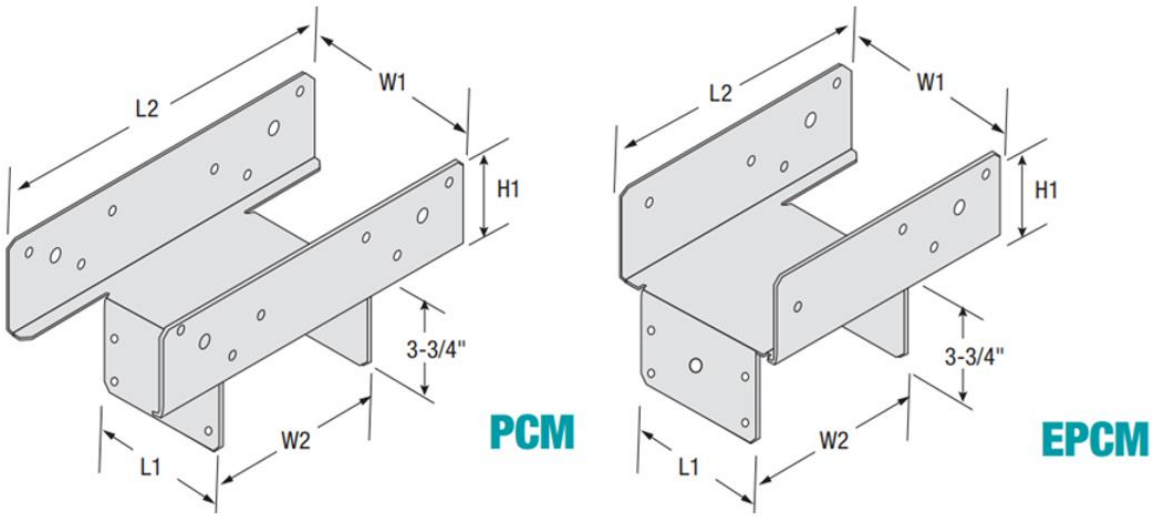

Figure 20. Post Cap (PCM) and End Post Cap (EPCM)

2.4.2.12 *QuickTie Girder Connector (QGC and QGCW):*

2.4.2.12.1 QuickTie Girder Connectors are used for truss and rafter to top plate connections where uplift load design requirements are high, and for stud hold down connections. The QGC is 12-gauge (minimum thickness with coating is 0.0994") steel manufactured from ASTM A653 Structural Steel, Grade 50, Class 3 (F_u = 70-ksi, F_y = 50-ksi) steel galvanized with G185 or better zinc coating (see **Figure 21**). The QGC is attached to the top plate with a $^5/_8$" threaded rod or QuickTie Orange Cable, QTO(L), and is attached to the truss/rafter with $^1/_4$" screws. See **Table 28** for QGC fastener schedules and minimum fastener requirements. See **Table 32** for QGCW fastener schedules and minimum fastener requirements.

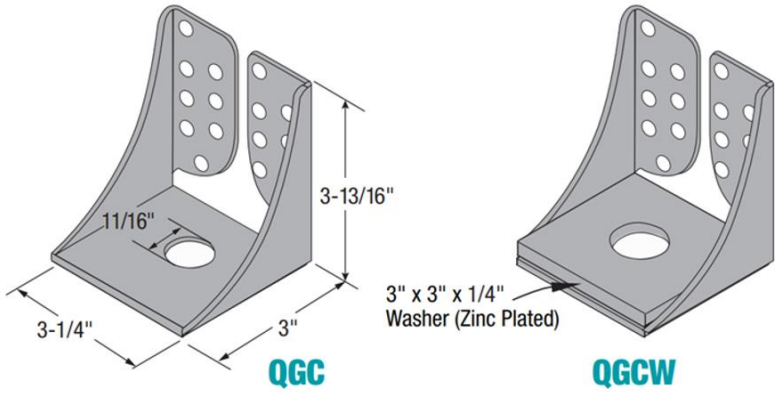

Figure 21. QuickTie Girder Connector (QGC and QGCW)

Information contained in this report was developed using report holder's confidential intellectual property (IP) and trade secrets (TS), which is protected by Defend Trade Secrets Act 2016, © DrJ Engineering, LLC

2.4.2.13 *Light Tension Tie (LTT20):*

2.4.2.13.1 Light Tension Tie (LTT) is manufactured in a length of 20". The ties are used to connect wall bottom plates to studs or joist/purlin-to-wall attachment applications. Each strap is 2" wide with nail holes and a 2" x $2^1/_4$" x $^3/_{16}$" washer is riveted to the base. The LTT is 12-gauge (minimum thickness with coating 0.0994"). The LTT20 is manufactured from minimum ASTM A653 Structural Steel, Grade 50, Class 3 (F_u = 70-ksi, F_y = 50-ksi) steel galvanized with G185 or better zinc coating (**Figure 22**). See **Table 29** for fastener schedules.

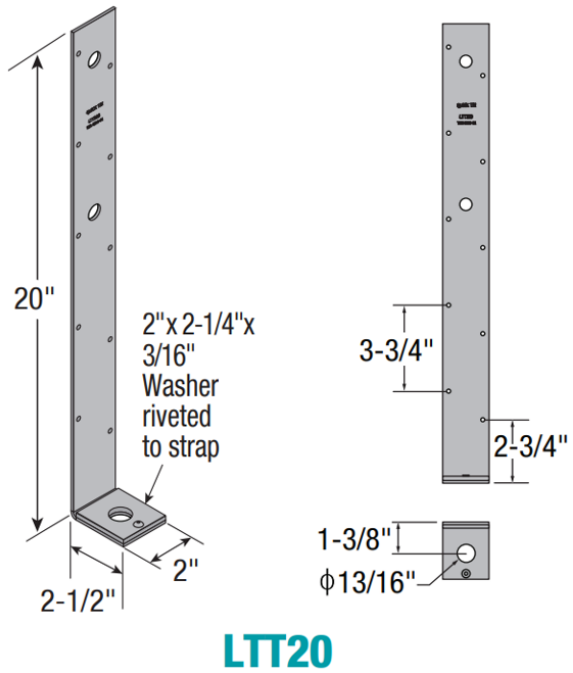

Figure 22. Light Tension Tie (LTT20)

Information contained in this report was developed using report holder's confidential intellectual property (IP) and trade secrets (TS), which is protected by Defend Trade Secrets Act 2016, © DrJ Engineering, LLC

2.4.2.14 *HDTT45 and HDTT6 Hold-Down Connectors:*

2.4.2.14.1 HDTT45 and HDTT6 Hold-Down Connectors are used to anchor stud walls into concrete. The HDTT45 and HDTT6 are 10-gauge (minimum thickness with coating is 0.135") steel. HDTT45 is manufactured from ASTM A653 Structural Steel, Grade 40 (F_u = 55-ksi, F_y = 40-ksi) steel galvanized with G90 or better zinc coating (see **Figure 23**). HDTT6 is manufactured from ASTM A653 Structural Steel, Grade 50, Class 3 (F_u = 70-ksi, F_y = 50-ksi) steel galvanized with G90 or better zinc coating (**Figure 24**). The HDTT45 is attached to the bottom plate with a $^5/_8$" threaded rod and is attached to the stud with 16d nails. The HDTT6 is attached to the bottom plate with a $^5/_8$" threaded rod through a 7-gauge steel washer and is attached to the stud with 16d x $2^1/_2$" nails (0.162" x 2.50"). Review **Table 30** for fastener schedules and minimum fastener requirements.

Figure 23. HDTT45 Hold Down

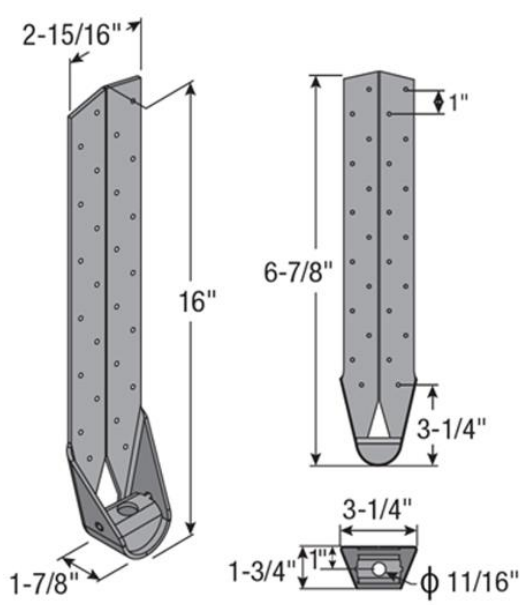

Figure 24. HDTT6 Hold Down

Information contained in this report was developed using report holder's confidential intellectual property (IP) and trade secrets (TS), which is protected by Defend Trade Secrets Act 2016, © DrJ Engineering, LLC

2.4.2.15 *HDTT, HDTT3, HD5, HD7, HD8, HD11, HD14, HD15/20, and HD22 Hold-Downs:*

2.4.2.15.1 HDTT, HDTT3, HD5, HD7, HD8, HD11, HD14, HD15/20, and HD22 Hold-Down Connectors are used to anchor stud walls and/or posts into concrete.

2.4.2.15.2 The HDTT is 14-gauge (minimum thickness with coating 0.0705") and is manufactured from ASTM A653 Structural Steel, Grade 50, Class 3 (F_u = 70-ksi, F_y = 50-ksi) steel galvanized with G185 or better zinc coating. The HDTT3 is 12-gauge (minimum thickness with coating 0.0994") and is manufactured from ASTM A653 Structural Steel, Grade 50, Class 3 (F_u = 70-ksi, F_y = 50-ksi) steel galvanized with G185 (minimum). See **Figure 25** and **Table 31** for fastening schedules and design values.

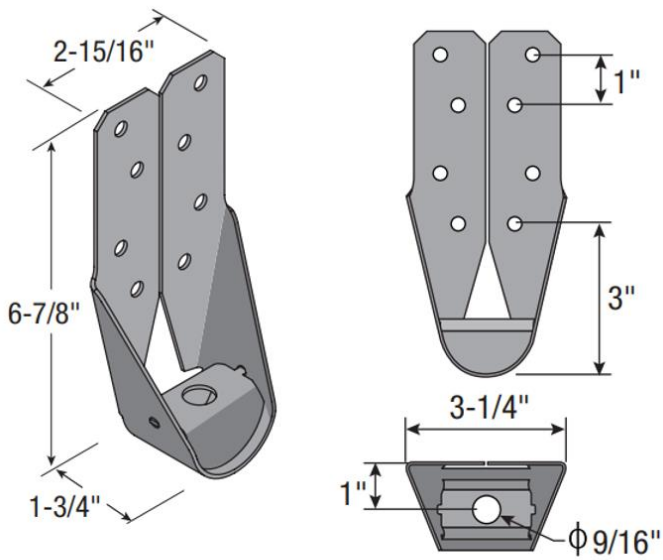

HDTT & HDTT3

Figure 25. HDTT and HDTT3 Hold Down

Information contained in this report was developed using report holder's confidential intellectual property (IP) and trade secrets (TS), which is protected by Defend Trade Secrets Act 2016, © DrJ Engineering, LLC

2.4.2.15.3 The HD5 is 14-gauge (minimum thickness with coating 0.0705") and is manufactured from ASTM A653 Structural Steel, Grade 50, Class 3 (F_u = 70-ksi, F_y = 50-ksi) steel galvanized with G185 or better zinc coating. See **Figure 26** and **Table 31** for fastening schedules and design values.

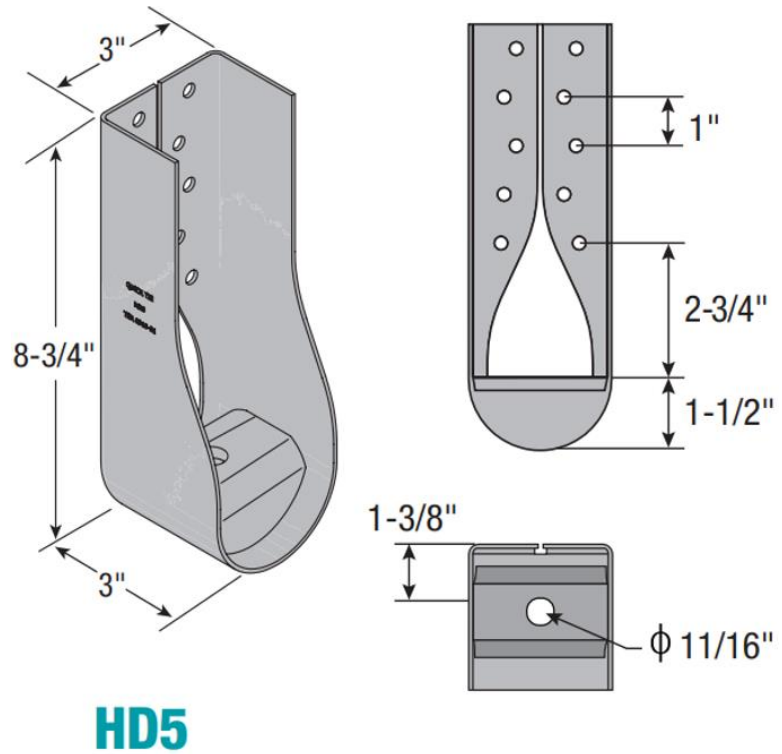

Figure 26. HD5 Hold-Down

2.4.2.15.4 The HD7, HD8, and HD11 are 12-gauge (minimum thickness with coating 0.0994") and are manufactured from ASTM A653 Structural Steel, Grade 50, Class 3 (F_u = 70-ksi, F_y = 50-ksi) steel galvanized with G185 or better zinc coating. See **Figure 27** and **Table 31** for fastening schedules and design values.

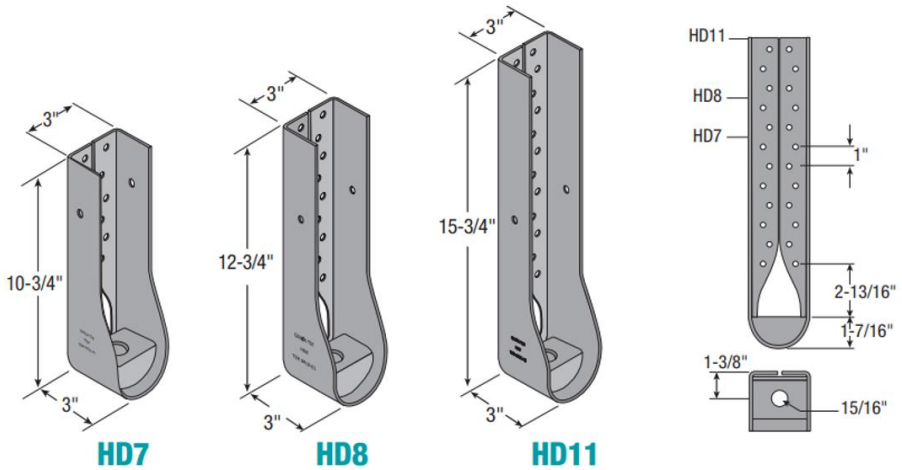

Figure 27. HD7, HD8, and HD11 Hold-Downs

Information contained in this report was developed using report holder's confidential intellectual property (IP) and trade secrets (TS), which is protected by Defend Trade Secrets Act 2016, © DrJ Engineering, LLC

2.4.2.15.5 The HD14 is 7-gauge (minimum thickness with coating is 0.1790") and is manufactured from ASTM A1011 Structural Steel, Grade 33 (F_u = 52-ksi, F_y = 33-ksi) uncoated steel, spray painted after welding the washer (3/8" thick) to the bottom of the bent strap (offset = 1"). See **Figure 28** and **Table 31** for fastening schedules and design values.

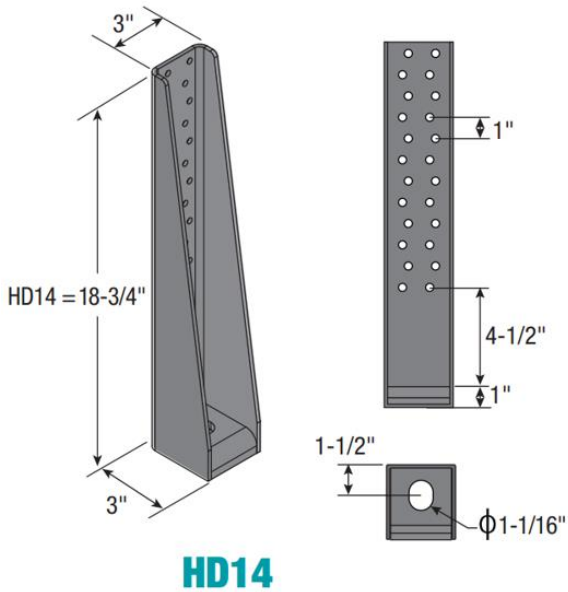

Figure 28. HD14 Hold-Down

2.4.2.15.6 The HD15/20 is 3-gauge (minimum thickness with coating is 0.239") and is manufactured from ASTM A36 Structural Steel (F_u = 58-ksi, F_y = 36-ksi) uncoated steel, spray painted after welding the washer (3/8" thick) to the bottom of the bent strap (offset = 3 1/2"). See **Figure 29** and **Table 31** for fastening schedules and design values.

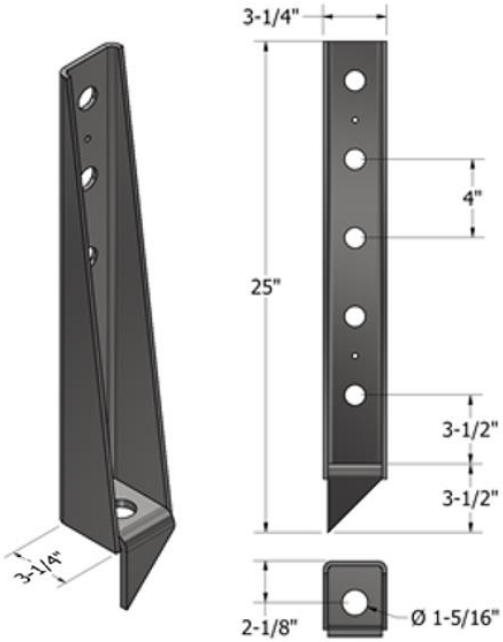

Figure 29. HD15/20 Hold Down

Information contained in this report was developed using report holder's confidential intellectual property (IP) and trade secrets (TS), which is protected by Defend Trade Secrets Act 2016, © DrJ Engineering, LLC

2.4.2.15.7 The HD22 is 7-gauge (minimum thickness with coating is 0.1790") and is manufactured from ASTM A1011 Structural Steel, Grade 33 (F_u = 52-ksi, F_y = 33-ksi) uncoated steel, spray painted after welding the washer ($^3/_8$" thick) to the bottom of the bent strap (offset = $3^1/_2$"). See **Figure 30** and **Table 31** for fastening schedules and design values.

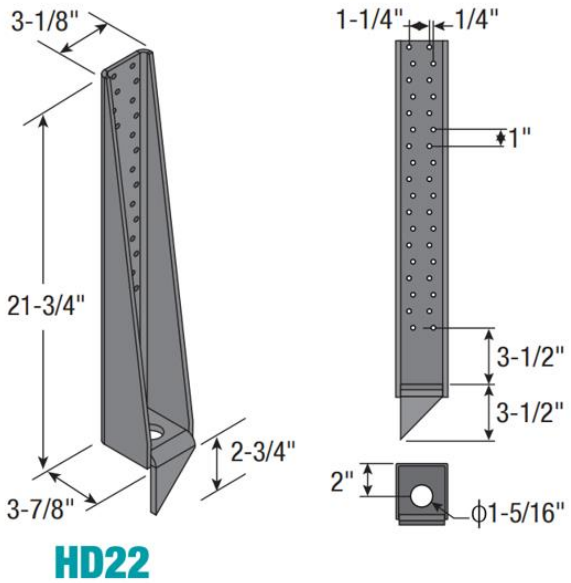

Figure 30. HD22 Hold-Down

2.4.2.16 *METAS/HETAS Embedded Truss Anchor Straps:*

2.4.2.16.1 The METAS and HETAS are embedded anchors designed to connect truss/rafter joists to the top of Concrete Masonry Unit (CMU) and concrete walls. METAS (18-gauge) and HETAS (16-gauge) embedded anchors are manufactured from ASTM A653 Grade 50, Class 3 Structural Steel (F_u = 70-ksi, F_y = 50-ksi). See **Figure 31** and **Table 33** for fastening schedules and design values.

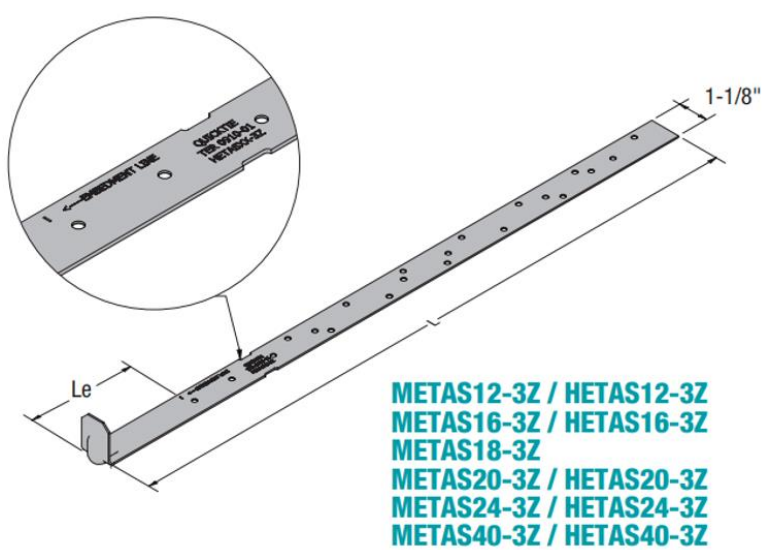

Figure 31. METAS and HETAS Embedded Anchor

Information contained in this report was developed using report holder's confidential intellectual property (IP) and trade secrets (TS), which is protected by Defend Trade Secrets Act 2016, © DrJ Engineering, LLC

2.4.2.17 *PCS, PCES Post Caps, and End Post Caps:*

2.4.2.17.1 PCS connectors are post cap connectors used to join center posts to beams. PCES connectors are post cap connectors used to join end posts to beams. PCS and PCES connectors are manufactured from ASTM A653 Grade 50, Class 3 Structure Steel (F_u = 70-ksi, F_y = 50-ksi). See **Figure 32**, **Figure 34**, and **Figure 35** for fastening schedules and design values.

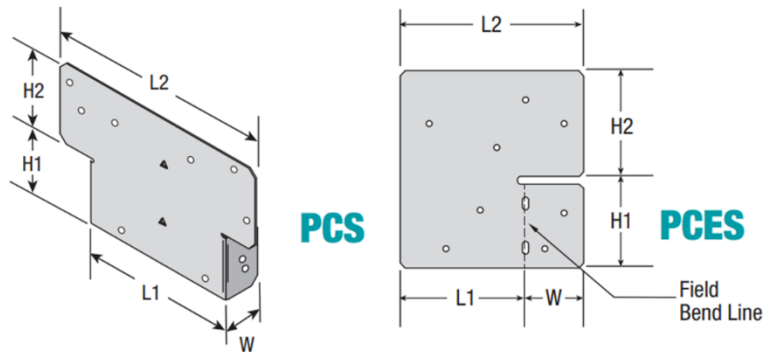

Figure 32. PCS and PCES Connectors

2.4.2.18 *PHGT, Post-Install Girder Tie-Downs:*

2.4.2.18.1 PHGT2, PHHGT3, and PHHGT4 connectors are tie-downs used to join 2-ply, 3-ply, or 4-ply girder trusses to wall frames or posts. PHGT connectors are cold-formed from 14-gauge (PHGT2) and 12-gauge (PHHGT3 and PHHGT4) steel with a specified ultimate tensile strength, (F_u = 70-ksi, F_y = 50-ksi). PHGT connectors are pre-punched for 10d common nails. See **Figure 33** and **Table 36** for fastening schedules and design values.

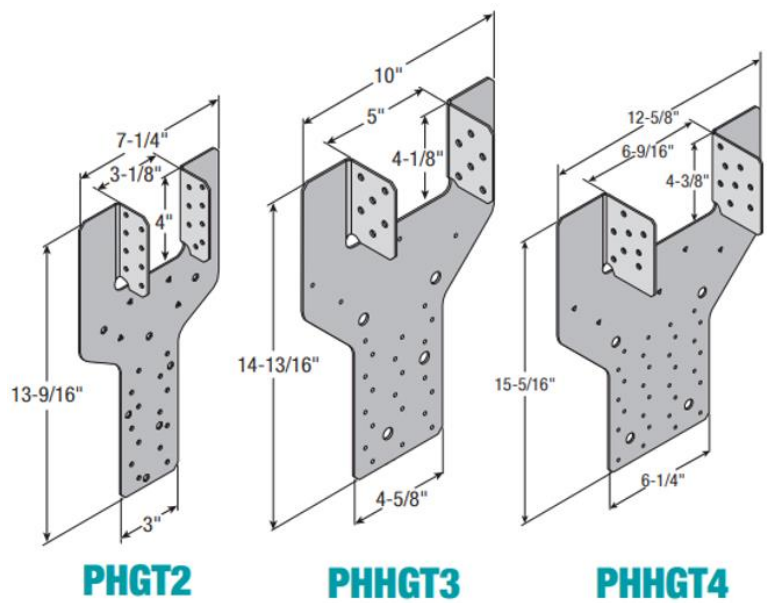

Figure 33. PHGT and PHHGT Post-install Girder Tie-Downs

Information contained in this report was developed using report holder's confidential intellectual property (IP) and trade secrets (TS), which is protected by Defend Trade Secrets Act 2016, © DrJ Engineering, LLC

2.4.2.19 *TCC Tension-Compression Drag Strut Connectors:*

2.4.2.19.1 TCC16L, TCC16R, TCC21L, and TCC21R connectors are Tension-Compression drag strut connectors used to transfer lateral forces from a truss to shear walls. TCC connectors are cold formed from 7-gauge (TCC16L and TCC16R) and 3-gauge (TCC21L and TCC21R) steel with a specified ultimate tensile strength, (F_u = 58-ksi, F_y = 36-ksi). See **Figure 34** and **Table 37** for fastening schedules and design values.

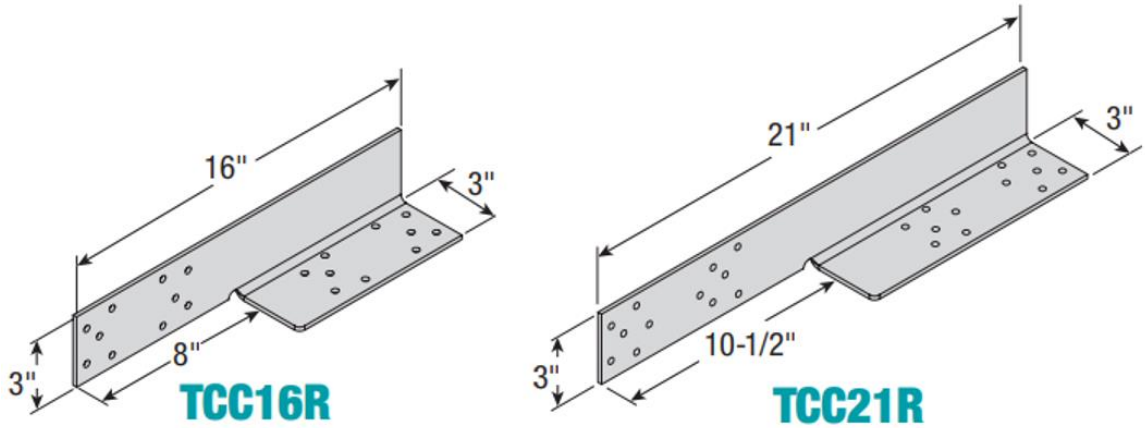

Figure 34. TCC Drag Strut Connectors

2.4.2.20 *PAS-Purlin Anchor Straps:*

2.4.2.20.1 PAS18-3Z, PAS23-3Z, PAS28-3Z, PAS35-3Z, and PAS51-3Z are embedded anchors designed to connect roof purlins to a concrete or CMU wall as a purlin anchor, or to connect studs to the foundation as a strap-tie hold down. PAS series anchor straps (12-gauge) embedded anchors are manufactured from ASTM A653 Grade 50, Class 3 Structural Steel (F_u = 70-ksi, F_y = 50-ksi). Galvanized coating complies with ASTM A653 Type G185. See **Figure 35** and **Table 38** for fastening schedules and design values.

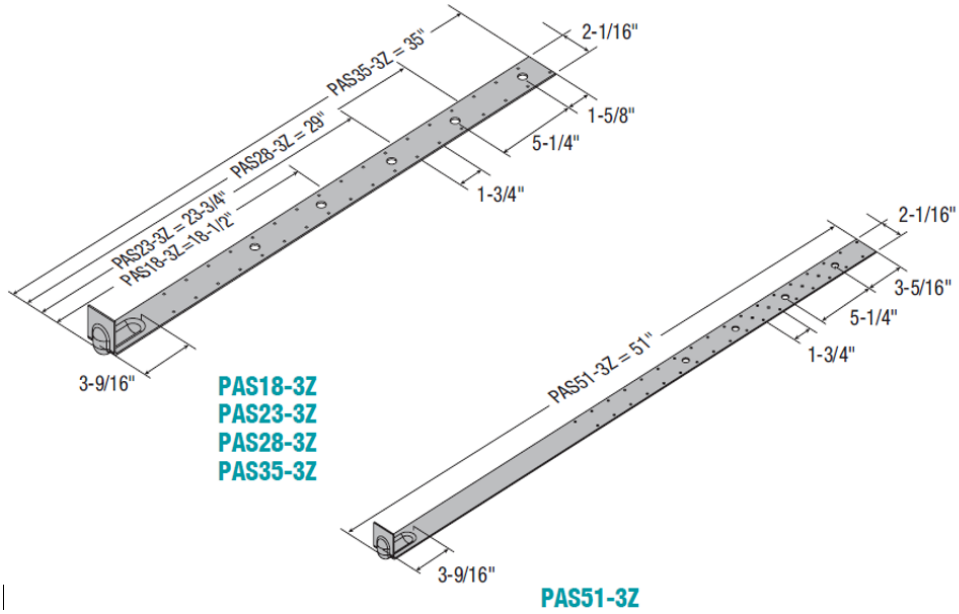

Figure 35. PAS Purlin Anchor Straps

Information contained in this report was developed using report holder's confidential intellectual property (IP) and trade secrets (TS), which is protected by Defend Trade Secrets Act 2016, © DrJ Engineering, LLC

2.4.2.21 *FSTHD and FSTHDJ Foundation Strap-Tie Hold-Downs:*

2.4.2.21.1 FSTHD8, FSTHD8J, FSTHD10, FSTHD10J, FSTHD14, and FSTHD14J are embedded strap-tie hold-downs designed to secure a structure's wood-framed walls to its foundation. FSTHD and FSTHDJ embedded strap-tie hold downs are manufactured from ASTM A653 Grade 50, Class 3 Structural Steel (F_u = 70-ksi, F_y = 50-ksi). See **Figure 36** and **Table 39** for fastening schedules and design values.

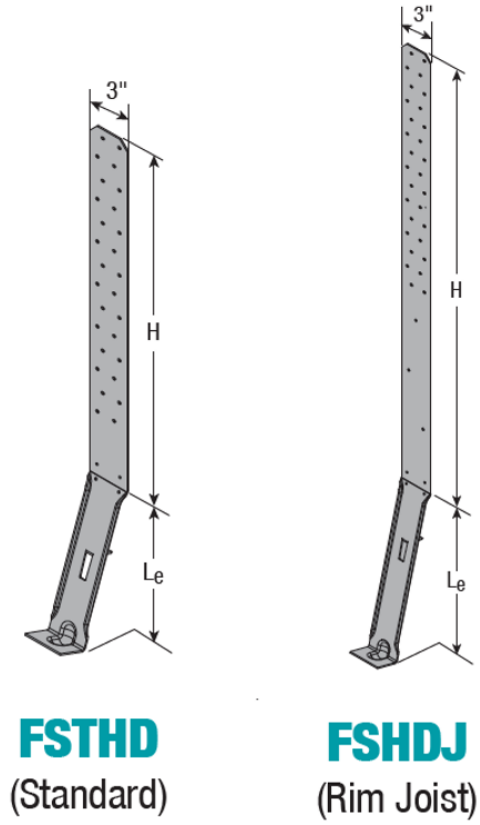

Figure 36. FSTHD and FSTHDJ Strap-Tie Hold-Downs

Information contained in this report was developed using report holder's confidential intellectual property (IP) and trade secrets (TS), which is protected by Defend Trade Secrets Act 2016, © DrJ Engineering, LLC

2.4.2.22 *TR1 andTR2 Roof Truss Clips:*

2.4.2.22.1 TR1 and TR2 Roof Truss Clips are connectors designed for alignment control between a roof truss and non-loadbearing walls. The slots allows vertical truss chord movement. TR1 and TR2 Truss Clips are manufactured from ASTM A653 Grade 50, Class 3 Structural Steel (F_u = 70-ksi, F_y = 50-ksi). See **Figure 37** and **Table 40** for fastening schedules and design values.

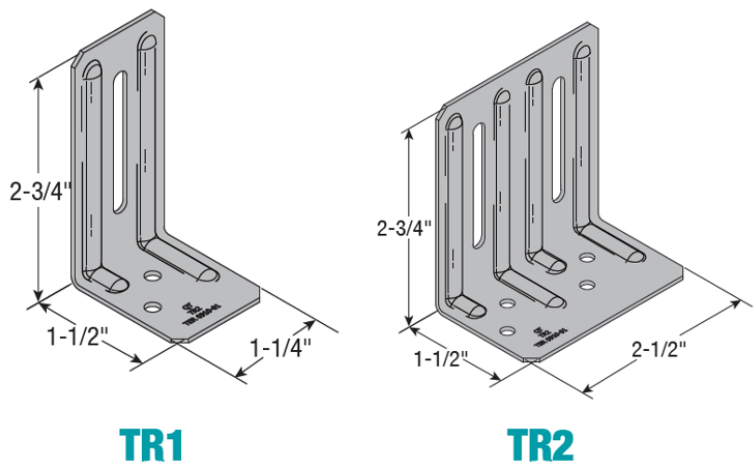

Figure 37. TR1 and TR2 Roof Truss Clips

2.4.2.23 *FASA4 Foundation Anchor Strap:*

2.4.2.23.1 FASA4 Foundation Anchor Strap is a cast-in-place connector designed for use as an alternative to anchor bolts. Each FASA4 strap has one end that that is embedded into the concrete foundation. The other end extends above concrete foundation and is field-bent over nominal 2x sill plates (with both legs bent around sill plate). Alternatively, one leg may be bent over the sill plate while the other leg is secured vertically over an adjacent stud. FASA4 Foundation Anchor Straps are manufactured from 16-gauge, ASTM A653 Grade 50, Class 3 Structural Steel (F_u = 70-ksi, F_y = 50-ksi). See **Figure 38** and **Table 41** for fastening schedules and design values.

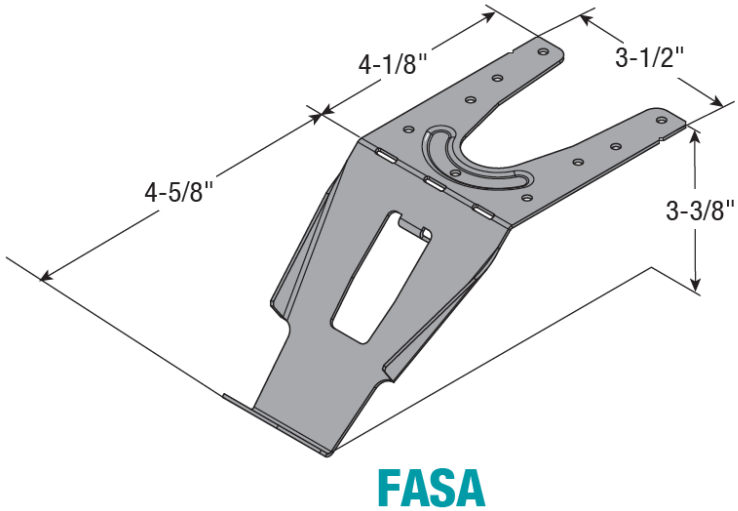

Figure 38. FASA4 Foundation Anchor Strap

Information contained in this report was developed using report holder's confidential intellectual property (IP) and trade secrets (TS), which is protected by Defend Trade Secrets Act 2016, © DrJ Engineering, LLC

2.4.2.24 *TCS18-3Z and TCS20-3Z Tension-Compression Straps:*

2.4.2.24.1 TCS18-3Z and TCS20-3Z Tension-Compression Straps are connectors designed to bridge/repair discontinuous wood members (e.g., top plates, studs, trusses) by transferring axial loads from one member to the other connected member. The TCS18-3Z strap may span gaps up to $4^1/_2$", and the TCS20-3Z may span gaps up to 6". Both straps have a nominal width of $1^1/_2$", which allows installation on the narrow face of nominal 2x wood lumbers. TCS18-3Z and TCS20-3Z Tension-Compression Straps are manufactured from ASTM A653 Grade 50, Class 3 Structural Steel (F_u = 70-ksi, F_y = 50-ksi). See **Figure 39** and **Table 42** for fastening schedules and design values.

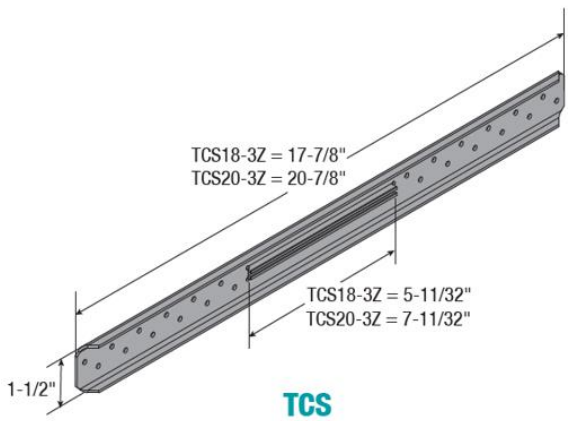

Figure 39. TCS18 and TCS20 Tension-Compression Straps

2.4.2.25 *RSPT4, RSPT6M, RSPT6, and RSPT6-2 Stud Plate Ties:*

2.4.2.25.1 RSPT4, RSPT6M, RSPT6, and RSPT6-2 Stud Plate Ties are connectors designed to connect wood studs to either top or sill plates of wood framed walls. The RSPT4, RSPT6M, and RSPT6 connectors are designed to be used with nominal 2x wood members. The RSPT6-2 is designed for use with a double stud consisting of two nominal 2x wood members. The RSPT6M connector has a connection width of $1^1/_2$". RSPT4 and RSPT6 connectors have a connection width of $1^3/_8$". The RSPT6-2 has a connection width of $2^3/_4$". RSPT4, RSPT6M, RSPT6, RSPT6-2 Stud Plate Ties are manufactured from ASTM A653 Grade 50, Class 3 Structural Steel (F_u = 70-ksi, F_y = 50-ksi). See **Figure 40** and **Table 43** for fastening schedules and design values.

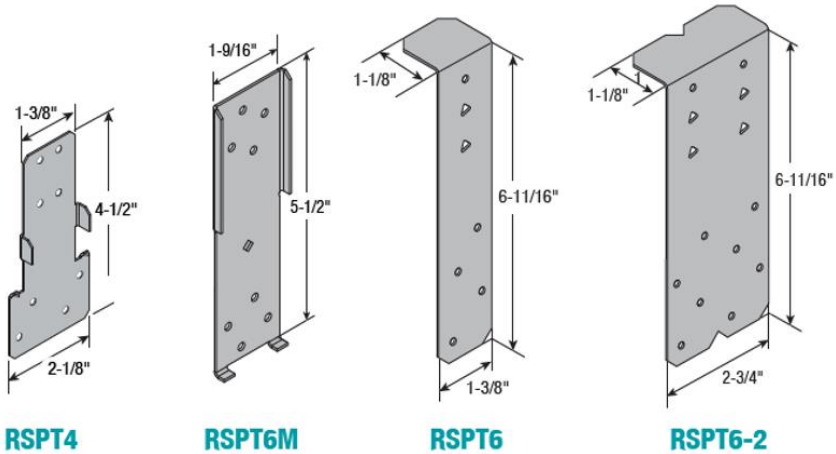

Figure 40. RSPT4, RSPT6M, RSPT6, and RSPT6-2 Stud Plate Ties

Information contained in this report was developed using report holder's confidential intellectual property (IP) and trade secrets (TS), which is protected by Defend Trade Secrets Act 2016, © DrJ Engineering, LLC

2.5 *QuickTie Screws*

2.5.1 QuickTie Screws are manufactured from carbon steel wire using a standard cold-formed process followed by a heat-treating process. All QuickTie Screws have a Dörken® coating. QuickTie Truss Screws (SWT) have an additional teal top coat over the Dörken coating. All QuickTie screws have been tested and found to exceed the protection provided by code approved hot-dipped galvanized coatings meeting ASTM A153, Class D (IBC Section 2304.10.6[3] and IRC Section R304.3[4]), allowing for its use in pressure treated wood.

2.5.1.1 SWH screws have a hex head washer and are partially threaded (see **Figure 41**).

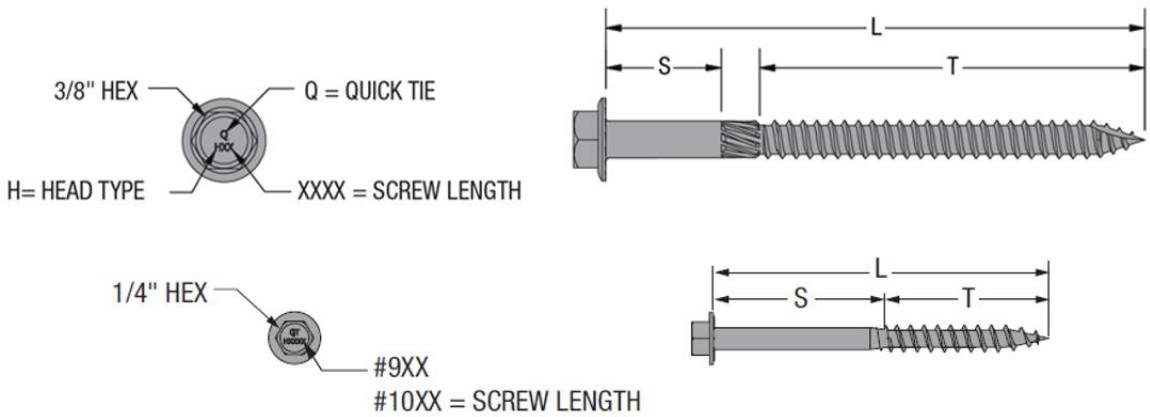

Figure 41. SWH Screw

2.5.1.2 SWF screws have a round wafer (flat) head with a T30 star drive and are partially threaded (see **Figure 42**).

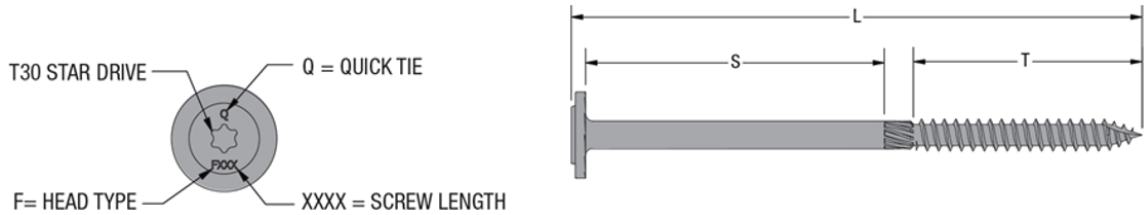

Figure 42. SWF Screw

2.5.1.3 SWT screws have a truss head with a T30 star drive and are fully threaded (see **Figure 43**).

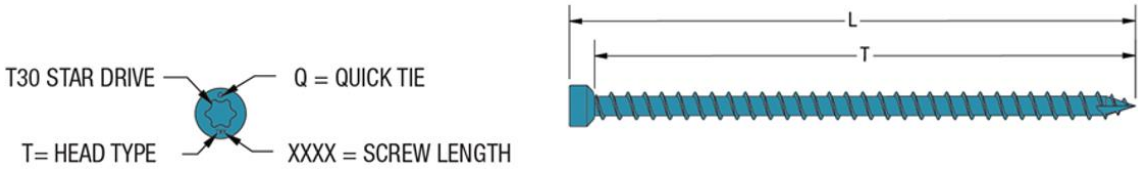

Figure 43. SWT Screw

Information contained in this report was developed using report holder's confidential intellectual property (IP) and trade secrets (TS), which is protected by Defend Trade Secrets Act 2016, © DrJ Engineering, LLC

2.5.1.4 SWL screws have a fillister head with a T20 star drive and are partially threaded (see **Figure 44**).

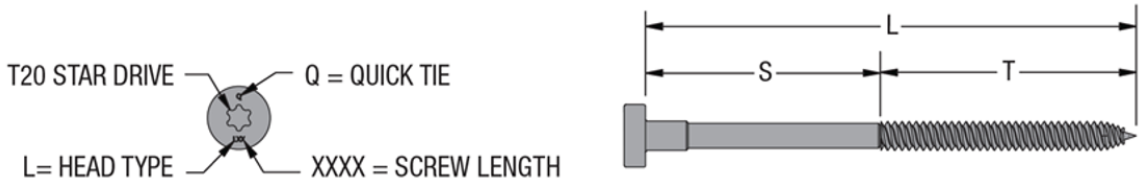

Figure 44. SWL Screw

2.5.1.5 Specifications and mechanical properties of the screws evaluated in this report are stated in **Table 1**.

Table 1. Fastener Specifications[3]

Fastener Name	Part Number	Nominal Length[1] (in)	Thread Length[2] (in)	Head		Diameter (in)				Nominal Bending Yield, F_{yb} (psi)	Allowable Fastener Strength (lbs)	
				Style	Drive System	Head	Shank	Minor	Major		Tensile	Shear[4]
SWH	SWH15	1 1/2	1 1/4	Hex Head	3/8" Hex	0.540	0.241	0.185	0.254	168,000	1,435	985
	SWH2	2	1 3/4									
	SWH25	2 1/2	2 1/4									
	SWH3	3	2 1/4									
	SWH35	3 1/2	2 3/4									
	SWH45	4 1/2	3 1/4									
	SWH5	5	3 1/4									
	SWH6	6	4 1/4									
	SWH8	8	3 1/4									
SWH9	SWH915	1 1/2	1.2	Hex Head	3/8" Hex	0.378	0.132	0.113	0.177	190,000	555	445
	SWH925	2 1/2										
SWH10	SWH1015	1 1/2	1.2	Hex Head	3/8" Hex	0.378	0.161	0.126	0.200	190,000	555	445
	SWH1025	2 1/2										
SWF	SWF278	2 7/8	2 1/4	Flat Head	T30 Star Drive	0.750	0.241	0.185	0.280	175,000	1,645	1,145
	SWF338	3 3/8	2 1/4									
	SWF358	3 5/8	2 1/4									
	SWF45	4 1/2	2 1/4									
	SWF5	5	2 1/4									
	SWF6	6	2 1/4									
	SWF638	6 3/8	2 1/4									
	SWF634	6 3/4	2 1/4									
	SWF8	8	2 1/4									

Information contained in this report was developed using report holder's confidential intellectual property (IP) and trade secrets (TS), which is protected by Defend Trade Secrets Act 2016, © DrJ Engineering, LLC

Table 1. Fastener Specifications[3]

Fastener Name	Part Number	Nominal Length[1] (in)	Thread Length[2] (in)	Head		Diameter (in)				Nominal Bending Yield, F_{yb} (psi)	Allowable Fastener Strength (lbs)	
				Style	Drive System	Head	Shank	Minor	Major		Tensile	Shear[4]
SWT	SWT45	$4^1/_2$	$4^5/_{16}$	Truss/ Stud	T30 Star Drive	0.330	-	0.160	0.235	190,000	1,160	820
	SWT6	6	$5^{13}/_{16}$									
SWL	SWL15	$1^3/_8$	$1^1/_8$	Fillister Head	T20 Star Drive	0.365	-	0.109	0.170	160,000	465	385
	SWL3	$2^7/_8$	$1^1/_2$									

SI: 1 in = 25.4 mm, 1 lb = 4.45 N, 1-psi = 0.00689 MPa

1. SWF and SWT fastener lengths are measured from the top side of the head to the tip. SWH and SWL fastener lengths are measured from the underside of the head to the tip.
2. Thread length excludes the knurl on SWH and SWF. SWT and SWL do not contain a knurl.
3. Measurements are based on manufactured thicknesses. Finished dimensions are larger due to the proprietary coatings added.
4. Shear strength is determined in accordance with AISI S904 using minor thread diameter when fastener is tested in the threaded section.

2.6 Reference lateral design values for shear loads perpendicular to grain and parallel to grain in wood-to-wood connections and steel-to-wood connections are specified in **Table 44** and **Table 45**, respectively.

2.7 As needed, review material properties for design in **Section 6** and the regulatory evaluation in **Section 8**.

3 Definitions[5]

3.1 New Materials[6] are defined as building materials, equipment, appliances, systems, or methods of construction, not provided for by prescriptive and/or legislatively adopted regulations, known as alternative materials.[7] The design strength and permissible stresses shall be established by tests[8] and/or engineering analysis.[9]

3.2 Duly authenticated reports[10] and research reports[11] are test reports and related engineering evaluations that are written by an approved agency[12] and/or an approved source.[13]

3.2.1 This report utilizes intellectual property and/or trade secrets to create public domain material properties for commercial end-use.

3.2.1.1 This report protects confidential Intellectual Property and trade secrets under the regulation, 18.US.Code.90, also known as Defend Trade Secrets Act of 2016 (DTSA).[14]

3.3 An approved agency is *"approved"* when it is ANAB ISO/IEC 17065 accredited. DrJ Engineering, LLC (DrJ) is accredited and listed in the ANAB directory.

3.4 An approved source is *"approved"* when a professional engineer (i.e., Registered Design Professional, hereinafter RDP) is properly licensed to transact engineering commerce. The regulatory authority governing approved sources is the state legislature via its professional engineering regulations.[15]

3.5 Testing and/or inspections conducted for this duly authenticated report were performed by an ISO/IEC 17025 accredited testing laboratory, an ISO/IEC 17020 accredited inspection body, and/or a licensed RDP.

3.5.1 The Center for Building Innovation (CBI) is ANAB[16] ISO/IEC 17025 and ISO/IEC 17020 accredited.

3.6 The regulatory authority shall enforce[17] the specific provisions of each legislatively adopted regulation. If there is a non-conformance, the specific regulatory section and language of the non-conformance shall be provided in writing[18] stating the nonconformance and the path to its cure.

Information contained in this report was developed using report holder's confidential intellectual property (IP) and trade secrets (TS), which is protected by Defend Trade Secrets Act 2016, © DrJ Engineering, LLC

3.7 The regulatory authority shall accept duly authenticated reports from an approved agency and/or an approved source with respect to the quality and manner of use of new materials or assemblies as provided for in regulations regarding the use of alternative materials, designs, or methods of construction.[19]

3.8 ANAB is an International Accreditation Forum (IAF) Multilateral Recognition Arrangement (MLA) signatory. Therefore, recognition of certificates and validation statements issued by conformity assessment bodies accredited by all other signatories of the IAF MLA with the appropriate scope shall be approved.[20] Thus, all ANAB ISO/IEC 17065 duly authenticated reports are approval equivalent,[21] and can be used in any country that is an MLA signatory found at this link: https://iaf.nu/en/recognised-abs/

3.9 Approval equity is a fundamental commercial and legal principle.[22]

4 Applicable Local, State, and Federal Approvals; Standards; Regulations[23]

4.1 *Local, State, and Federal*

4.1.1 Approved in all local jurisdictions pursuant to ISO/IEC 17065 duly authenticated report use, which includes, but is not limited to, the following featured local jurisdictions: Austin, Baltimore, Broward County, Chicago, Clark County, Dade County, Dallas, Detroit, Denver, DuPage County, Fort Worth, Houston, Kansas City, King County, Knoxville, Las Vegas, Los Angeles City, Los Angeles County, Miami, Nashville, New York City, Omaha, Philadelphia, Phoenix, Portland, San Antonio, San Diego, San Jose, San Francisco, Seattle, Sioux Falls, South Holland, St. Louis County, Texas Department of Insurance, and Wichita.[24]

4.1.2 Approved in all state jurisdictions pursuant to ISO/IEC 17065 duly authenticated report use, which includes, but is not limited to, the following featured states: California, Florida, New Jersey, Oregon, New York, Texas, Washington, and Wisconsin.[25]

4.1.3 Approved by the Code of Federal Regulations Manufactured Home Construction: Pursuant to Title 24, Subtitle B, Chapter XX, Part 3282.14[26] and Part 3280[27] pursuant to the use of ISO/IEC 17065 duly authenticated reports.

4.1.4 Approved means complying with the requirements of local, state, or federal legislation.

4.2 *Regulations*

4.2.1 *IBC – 18, 21, 24: International Building Code®*

4.2.2 *IRC – 18, 21, 24: International Residential Code®*

4.2.3 *FBC-B—20, 23: Florida Building Code[28] – Building20F (FL 3557 and FL 13468)*

4.2.4 *FBC-R—20, 23: Florida Building Code[28] – Residential (FL 3557 and FL 13468)*

4.2.5 *NCBC—18: North Carolina Building Code*

4.3 *Standards*

4.3.1 *ACI 318: Building Code Requirements for Structural Concrete and Commentary*

4.3.2 *ACI 355.2: Qualification of Post-Installed Mechanical Anchors in Concrete and Commentary*

4.3.3 *ACI 355.4: Qualification of Post-Installed Adhesive Anchors in Concrete and Commentary*

4.3.4 *AISI S100: North American Specification for the Design of Cold-Formed Steel Structural Members*

4.3.5 *AISI S904: Test Standard for Determining the Tensile and Shear Strengths of Steel Screws*

4.3.6 *AISI S913: Test Standard for Hold-Downs Attached to Cold-Formed Steel Structural Framing*

4.3.7 *ANSI/AISC 360: Specification for Structural Steel Buildings*

4.3.8 *ANSI/AWC NDS: National Design Specification (NDS) for Wood Construction*

4.3.9 *ASCE/SEI 7: Minimum Design Loads and Associated Criteria for Buildings and Other Structure*

4.3.10 *ASCE/SEI 19: Structural Applications of Steel Cables for Buildings*

Information contained in this report was developed using report holder's confidential intellectual property (IP) and trade secrets (TS), which is protected by Defend Trade Secrets Act 2016, © DrJ Engineering, LLC

4.3.11 *ASTM A36: Standard Specification for Carbon Structural Steel*

4.3.12 *ASTM A153: Standard Specification for Zinc Coating (Hot-Dip) on Iron and Steel Hardware*

4.3.13 *ASTM A370: Standard Test Methods and Definitions for Mechanical Testing of Steel Products*

4.3.14 *ASTM A510: Standard Specification for General Requirements for Wire Rods and Coarse Round Wire, Carbon Steel, and Alloy Steel*

4.3.15 *ASTM A653: Standard Specification for Steel Sheet, Zinc-Coated (Galvanized) or Zinc-Iron Alloy-Coated (Galvannealed) by the Hot-Dip Process*

4.3.16 *ASTM A1011: Standard Specification for Steel, Sheet and Strip, Hot-Rolled, Carbon, Structural, High Strength Low-Alloy, High-Strength Low-Alloy with Improved Formability, and Ultra-High Strength*

4.3.17 *ASTM A1023: Standard Specification for Carbon Steel Wire Ropes for General Purposes*

4.3.18 *ASTM B117: Standard Practice for Operating Salt Spray (Fog) Apparatus*

4.3.19 *ASTM D1761: Standard Test Methods for Mechanical Fasteners in Wood and Wood-Based Materials*

4.3.20 *ASTM D7147: Standard Specification for Testing and Establishing Allowable Loads of Joist Hangers*

4.3.21 *ASTM F1575: Standard Test Method for Determining Bending Yield Moment of Nails*

4.3.22 *ASTM F1667: Standard Specification for Driven Fasteners: Nails, Spikes, and Staples*

4.3.23 *ASTM G85: Standard Practice for Modified Salt Spray (Fog) Testing*

4.3.24 *AWC TR 12: General Dowel Equations for Calculating Lateral Connection Values*

5 Listed[29]

5.1 Equipment, materials, products, or services included in a List published by a nationally recognized testing laboratory (e.g., CBI), an approved agency (e.g., CBI and DrJ), and/or and approved source (e.g., DrJ), or other organization(s) concerned with product evaluation (e.g., DrJ), that maintains periodic inspection (e.g., CBI) of production of listed equipment or materials, and whose listing states either that the equipment or material meets nationally recognized standards or has been tested and found suitable for use in a specified manner.

6 Tabulated Properties Generated from Nationally Recognized Standards

6.1 *QTS*

6.1.1 QTS is used to anchor walls and floors to the foundation primarily using the approved adhesives (QE-1 and QE-2) listed in **Section 2.1.4.2**.

6.1.1.1 Anchoring systems using QE-1 and QE-2 epoxy adhesives, in addition to the steel elements stated in **Section 2.1.4.2**, comply with the provisions in IBC Section 1901.3.

6.1.1.2 Anchoring systems using QE-1 and QE-2 epoxy adhesives, in addition to the steel elements stated in **Section 2.1.4.2**, may also be used where an engineered design is submitted in accordance with IRC Section R301.1.3.

6.1.2 QTS has established installation into concrete included as a part of this report. If the conditions do not meet or exceed the minimums requirements, the RDP responsible for the design of the building shall provide a connection to attach the QTS to the foundation. The anchorage shall be sufficient to resist the design loads imposed by uplift and/or overturning plus the pre-stress tension in the cable.

Information contained in this report was developed using report holder's confidential intellectual property (IP) and trade secrets (TS), which is protected by Defend Trade Secrets Act 2016, © DrJ Engineering, LLC

6.1.3 Installation of the QTS to the foundation will follow the established installations shown in this report. If the conditions do not meet or exceed the minimum requirements shown in report, the installation of QTS to the foundation will depend on the connection design chosen by the RDP. The QTS-to-foundation design considerations include but are not limited to the following:

6.1.3.1 The connection between the QTS and foundation is applied/installed per RDP specifications.

6.1.3.2 The QTS is pre-tensioned as specified per the QuickTie Product, Inc. published installation instructions. The pre-tensioned level is dependent on the uplift requirements determined by the RDP but shall not exceed the allowable tensile capacity of the QTS listed in **Section 6.2.1**.

6.1.3.3 In addition to providing positive anchorage for the walls and floors, the pre-tensioning of QTS provides immediate verification of the adequacy of the connection between the QTS and the foundation, because the initial pre-tension load provides a proof test verification of this connection.

6.1.3.4 The RDP shall verify that the structural framing material is adequate to resist the compression forces induced by the pre-stressing of the QTS. In some locations, additional framing or reinforcement may be required.

6.2 *Design*

6.2.1 *QTS:*

6.2.1.1 **Table 2** lists the allowable tensile loads (based on ASD basis) of the QTS. See **Figure 45** for concrete connection details.

6.2.1.1.1 Values in **Table 2** are applicable when installed with QE-1 or QE-2 epoxy adhesives.

6.2.1.1.2 Installation with other adhesives is outside the scope of this report.

Table 2. Allowable Tensile Loads of the QTS

Cable Type	Cable Diameter (in)	Minimum Edge Distance (c_{a1}) (in)	Minimum Embedment Depth (h_{ef}) (in)	Allowable QTS Tension Loads[1,2,3] (lbs)
QTB(L) Blue	$^3/_{16}$	$2^1/_4$	4	1,910
QTG(L) Green	$^1/_4$	$2^1/_4$	4	3,180
QTO(L) Orange	$^5/_{16}$	3	$6^5/_8$	4,455
QTR(L) Red	$^3/_8$	$3^1/_2$	$8^1/_8$	6,545

SI: 1 in = 25.4 mm, 1 lb = 4.45 N

1. Allowable QTS loads are based on cables installed in uncracked normal weight concrete with no supplementary reinforcement in accordance with ASCE/SEI 19.
2. Minimum end distance (c_{a2}) is 6" (See **Figure 45**).
3. Minimum 28-day concrete compressive strength is 2,500-psi.

Information contained in this report was developed using report holder's confidential intellectual property (IP) and trade secrets (TS), which is protected by Defend Trade Secrets Act 2016, © DrJ Engineering, LLC

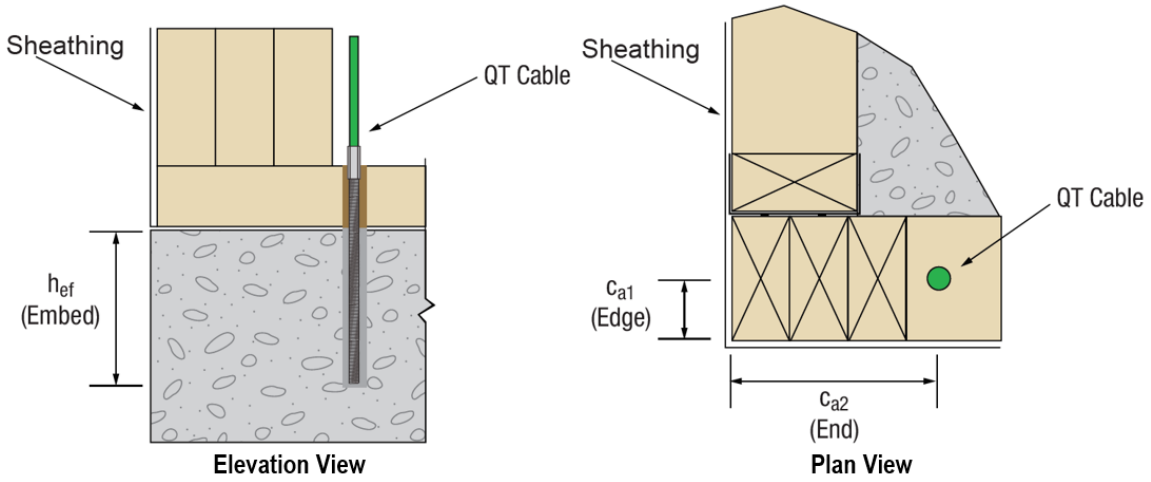

Figure 45. Concrete Connection Detail

6.2.1.2 Multiple QTS cables may be used together to transfer the applied load, where one QTS cable is not sufficient. See **Figure 46** for details of cable spacing and capacity where multiple QTS cables are used. See **Figure 2** for embedment depths and edge distance requirements. Maximum rated capacity shown in **Figure 46** is for the QTR cables.

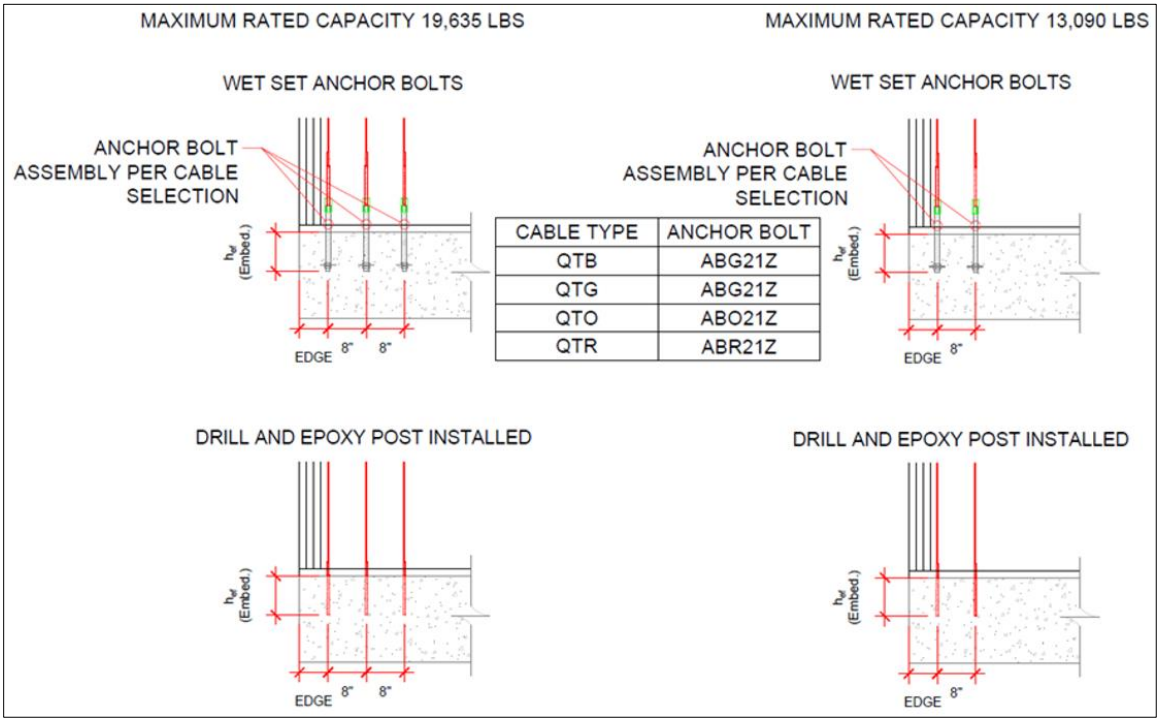

CABLE TYPE	ANCHOR BOLT
QTB	ABG21Z
QTG	ABG21Z
QTO	ABO21Z
QTR	ABR21Z

Figure 46. Anchorage Details for Multiple Cable Installation

Information contained in this report was developed using report holder's confidential intellectual property (IP) and trade secrets (TS), which is protected by Defend Trade Secrets Act 2016, © DrJ Engineering, LLC

6.2.1.3 Allowable loads are based on the published strength of the cables per ASTM A1023 using a safety factor of 2.2.

6.2.1.4 Construction documents shall include the information required by ASCE/SEI 19 Section 2.

6.2.1.4.1 See **Appendix B**. ASCE/SEI 19 Section 2 Contract Documents and Shop Drawings.

6.2.1.5 See **Appendix C.** Design Loads for QTB(L) and QTG(L) for additional details on design loads for uplift resistance.

6.2.2 *Allowable Load Adjustment Factors for Nail Size Substitution:*

6.2.2.1 For situations where a different nail size is used for the installation of the Post Base Anchors, Post Caps, Coiled Straps, Flat Straps, Twist Straps, Embedded Anchor Straps, Tension Ties, Shear Clips, Shear Flats, and Roof-Truss Clips, than what is stated in their respective tables in this section, adjustment factors are provided in **Table 3** below.

6.2.2.1.1 These reduction factors shall be applied to the allowable loads listed for the product.

Table 3. Allowable Load Adjustment Factors for Optional Nails

Connector Table Fastener	Replacement Fastener	Load Adjustment Factor		
		Post Base Anchors, and Post Caps	Coiled/Flat/Twist Straps, Embedded Anchors Straps, and Tension Ties	Shear Clips/Flats, and Roof-Truss Clips
0.131" x 1½"	0.131" x 2½"	1.00	1.00	1.00
	0.148" x 1¼"	1.00	1.00	1.00
	0.148" x 1½"	1.00	1.00	1.00
	0.148" x 2½"	1.00	1.00	1.00
	0.148" x 3¼"	1.00	1.00	1.00
	0.162" x 2½"	1.00	1.00	1.00
	0.162" x 3½"	1.00	1.00	1.00
0.131" x 2½"	0.131" x 1½"	0.97	0.97	0.97
	0.148" x 1¼"	1.00	1.00	1.00
	0.148" x 1½"	1.00	1.00	1.00
	0.148" x 2½"	1.00	1.00	1.00
	0.148" x 3¼"	1.00	1.00	1.00
	0.162" x 2½"	1.00	1.00	1.00
	0.162" x 3½"	1.00	1.00	1.00
0.148" x 1½"	0.131" x 1½"	0.82	0.82	0.82
	0.131" x 2½"	0.85	0.85	0.85
	0.148" x 1¼"	0.90	0.90	0.90
	0.148" x 2½"	1.00	1.00	1.00
	0.148" x 3¼"	1.00	1.00	1.00
	0.162" x 2½"	1.00	1.00	1.00
	0.162" x 3½"	1.00	1.00	1.00

Information contained in this report was developed using report holder's confidential intellectual property (IP) and trade secrets (TS), which is protected by Defend Trade Secrets Act 2016, © DrJ Engineering, LLC

Table 3. Allowable Load Adjustment Factors for Optional Nails

Connector Table Fastener	Replacement Fastener	Load Adjustment Factor		
		Post Base Anchors, and Post Caps	Coiled/Flat/Twist Straps, Embedded Anchors Straps, and Tension Ties	Shear Clips/Flats, and Roof-Truss Clips
0.148" x 2½"	0.131" x 1½"	0.82	0.82	0.82
	0.131" x 2½"	0.85	0.85	0.85
	0.148" x 1¼"	0.90	0.90	0.90
	0.148" x 1½"	1.00	1.00	1.00
	0.148" x 3¼"	1.00	1.00	1.00
	0.162" x 2½"	1.00	1.00	1.00
	0.162" x 3½"	1.00	1.00	1.00
0.148" x 3¼"	0.131" x 1½"	0.82	0.82	0.82
	0.131" x 2½"	0.85	0.85	0.85
	0.148" x 1¼"	0.90	0.90	0.90
	0.148" x 1½"	1.00	1.00	1.00
	0.148" x 2½"	1.00	1.00	1.00
	0.162" x 2½"	1.00	1.00	1.00
	0.162" x 3½"	1.00	1.00	1.00
0.162" x 2½"	0.131" x 1½"	0.71	0.71	0.71
	0.131" x 2½"	0.73	0.73	0.73
	0.148" x 1¼"	0.77	0.77	0.77
	0.148" x 1½"	0.86	0.86	0.86
	0.148" x 2½"	0.86	0.86	0.86
	0.148" x 3¼"	0.86	0.86	0.86
	0.162" x 3½"	1.00	1.00	1.00
0.162" x 3½"	0.131" x 1½"	0.71	0.71	0.71
	0.131" x 2½"	0.73	0.73	0.73
	0.148" x 1¼"	0.77	0.77	0.77
	0.148" x 1½"	0.86	0.86	0.86
	0.148" x 2½"	0.86	0.86	0.86
	0.148" x 3¼"	0.86	0.86	0.86
	0.162" x 2½"	1.00	1.00	1.00

Information contained in this report was developed using report holder's confidential intellectual property (IP) and trade secrets (TS), which is protected by Defend Trade Secrets Act 2016, © DrJ Engineering, LLC

Table 3. Allowable Load Adjustment Factors for Optional Nails

Connector Table Fastener	Replacement Fastener	Load Adjustment Factor		
		Post Base Anchors, and Post Caps	Coiled/Flat/Twist Straps, Embedded Anchors Straps, and Tension Ties	Shear Clips/Flats, and Roof-Truss Clips

SI: 1 in = 25.4 mm

1. Allowable load adjustment factors shown in the table are applicable to all products specified in this table, except as noted in the footnotes below.
2. Some products have been tested specifically with alternative fasteners and have allowable load adjustment factors or reduced capacities published in this report, Report Number 1811-03 or www.quicktieproducts.com. Values published therein may be used in lieu of using this table.
3. This table does not apply to skewed hangers or to hangers modified per allowed options, or to connectors made from steel thicker than 10-gauge.
4. Screws shall not be substituted for nails.
5. Nails and screws may not be combined in the same connection.
6. For straps installed over $^5/_8$" maximum wood structural panel sheathing, use a $2^1/_2$" long fastener minimum.
7. Nails that are $1^1/_2$" long fasteners may be substituted for the specified fastener into the header only; double-shear fasteners shall be minimum $2^1/_2$" long.

Information contained in this report was developed using report holder's confidential intellectual property (IP) and trade secrets (TS), which is protected by Defend Trade Secrets Act 2016, © DrJ Engineering, LLC

6.2.3 *Quick Connector HA4, HA6, HA8, and HA10 Hurricane and Seismic Anchor:*

6.2.3.1 Allowable loads and fastener schedules for the HA4 anchor are provided in **Table 4**.

6.2.3.2 Allowable loads and fastener schedules for the HA6 anchor are provided in **Table 5**.

6.2.3.3 Allowable loads and fastener schedules for the HA8 anchor are provided in **Table 6**.

6.2.3.4 Allowable loads and fastener schedules for the HA10 anchors are provided in **Table 7**.

Table 4. HA4 Hurricane and Seismic Anchor Allowable Loads

Species (Specific Gravity)	Fasteners			Allowable Load[1,2,3] (lbs)		
				Uplift	Lateral – F1[6]	Lateral – F2[7]
	Type[4,5]	To Rafter/Truss[4]	To Plates[5]	Load Duration Factor, C_D: 1.6		
Southern Pine (SP) (0.55)	8d x 1½" (0.131 x 1.5")	5	4	660	180	120
	10d x 1½" (0.148 x 1.5")	5	4	660	180	120
Douglas Fir-Larch (DF-L) (0.50)	8d x 1½" (0.131 x 1.5")	5	4	600	160	120
	10d x 1½" (0.148 x 1.5")	5	4	600	160	120
Spruce-Pine-Fir (SPF) (0.42)	8d x 1½" (0.131 x 1.5")	5	4	515	135	105
	10d x 1½" (0.148 x 1.5")	5	4	515	135	105

SI: 1 in = 25.4 mm, 1 lb = 4.45 N

1. Refer to **Appendix A**. General Notes for Tables.
2. Clips may be installed on both sides of the framing member for twice the load.
3. The tabulated loads are valid for clips installed on the inside or the outside of the wall. However, to maintain a continuous load path for uplift connections in close proximity to one another, such as truss-to-plate and plate-to-stud, clips should be installed on the same side of the wall.
4. Nails attaching clip to rafter or truss are 8d x 1½" (0.131 x 1.5") or 10d x 1½" (0.148 x 1.5") nails.
5. Nails attaching clip to wall plates are 8d (0.131 x 2.5") or 10d (0.148 x 3") nails.
6. Loading in the F1 direction indicates shear forces parallel to the plane of the wall. Refer to manufacturer literature for further details (See **Figure 47**).
7. Loading in the F2 direction indicates shear forces perpendicular to the plane of the wall. Refer to manufacturer literature for further details (See **Figure 47**).

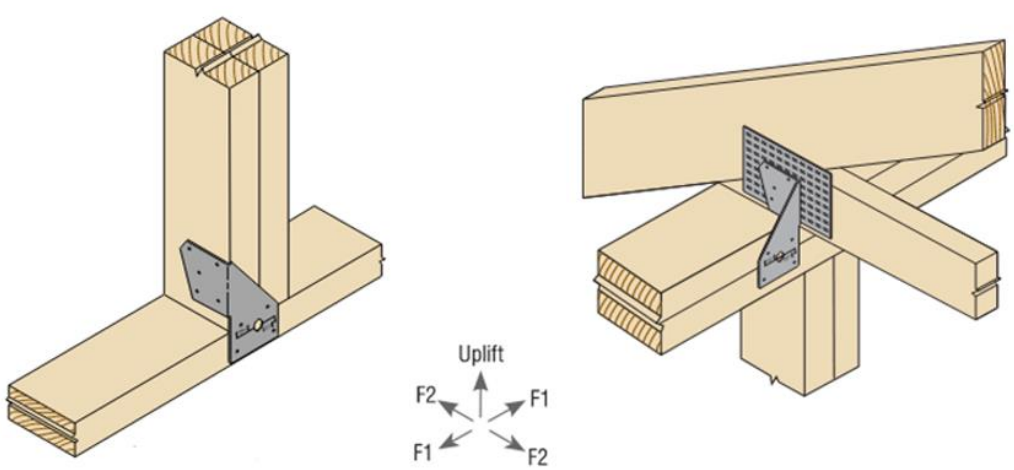

Figure 47. HA4 Load Directions

Information contained in this report was developed using report holder's confidential intellectual property (IP) and trade secrets (TS), which is protected by Defend Trade Secrets Act 2016, © DrJ Engineering, LLC

Table 5. HA6 Hurricane and Seismic Anchor Allowable Loads

Species (Specific Gravity)	Fasteners			Allowable Load[1,2,3] (lbs)					
				Uplift		Lateral - F1[4]	Lateral – F2[5]	Lateral – F3[6]	Lateral – F4[7]
	Type	Rafter/Truss	Plates	Load Duration Factor					
				1.0	1.6	1.6			
SP (0.55)	8d x 1$^1/_2$ (0.131 x 1.50")	5	5	535	705	145	140	130	90
DF-L (0.50)				495	665	125	125	125	80
SPF (0.42)				425	575	80	100	80	65

SI: 1 in = 25.4 mm, 1 lb = 4.45 N

1. Refer to **Appendix A**. General Notes for Tables.
2. Clips may be installed on both sides of the framing member for twice the allowable load capacity.
3. The tabulated loads are valid for clips installed on the inside or the outside of the wall. However, to maintain a continuous load path for uplift connections in close proximity to one another, such as truss-to-plate and plate-to-stud, clips should be installed on the same side of the wall.
4. Loading in the F1 direction indicates shear forces parallel to the plane of the wall, connection to rafter in withdrawal (See **Figure 48**).
5. Loading in the F2 direction indicates shear forces parallel to the plane of the wall, connection to rafter in compression (See **Figure 48**).
6. Loading in the F3 direction indicates shear forces perpendicular to the plane of the wall, connection to top plate in withdrawal (See **Figure 48**).
7. Loading in the F4 direction indicates shear forces perpendicular to the plane of the wall, connection to top plate in compression (See **Figure 48**).

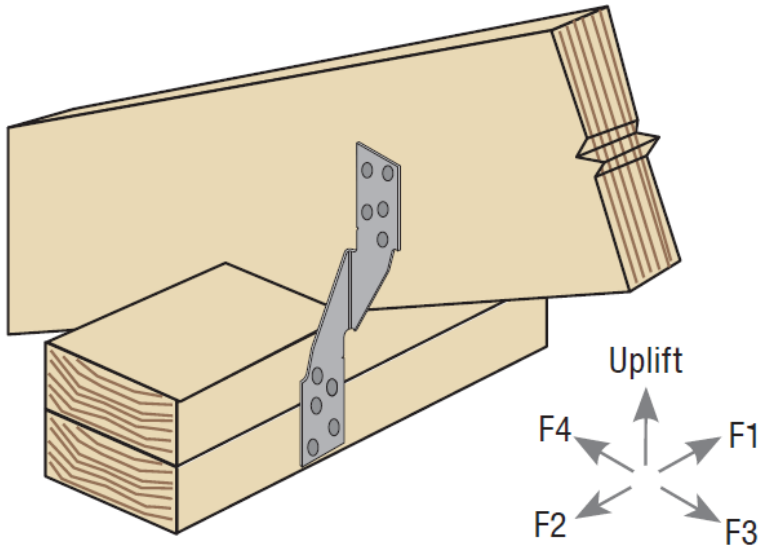

Figure 48. HA6 Load Directions

Information contained in this report was developed using report holder's confidential intellectual property (IP) and trade secrets (TS), which is protected by Defend Trade Secrets Act 2016, © DrJ Engineering, LLC

Table 6. HA8 Hurricane and Seismic Anchor Allowable Loads

Species (Specific Gravity)	Fasteners			Allowable Load[1,2,3] (lbs)	
				Uplift	Lateral – F1[6] and F2[7]
	Type[4,5]	To Rafter/Truss[4]	To Plates[5]	Load Duration Factor, C_D: 1.6	
SP (0.55)	8d x 1½" (0.131 x 1.5")	5	5	600	60
	10d x 1½" (0.148 x 1.5")	5	5	815	95
DF-L (0.50)	8d x 1½" (0.131 x 1.5")	5	5	600	60
	10d x 1½" (0.148 x 1.5")	5	5	705	70
SPF (0.42)	8d x 1½" (0.131 x 1.5")	5	5	485	60
	10d x 1½" (0.148 x 1.5")	5	5	540	70

SI: 1 in = 25.4 mm, 1 lb = 4.45 N

1. Refer to **Appendix A**. General Notes for Tables.
2. Clips may be installed on both sides of the framing member for twice the load.
3. The tabulated loads are valid for clips installed on the inside or the outside of the wall. However, to maintain a continuous load path for uplift, connections in close proximity to one another, such as truss-to-plate and plate-to-stud, clips should be installed on the same side of the wall.
4. Nails attaching clip to rafter or truss are 8d x 1½" (0.131 x 1.5") or 10d x 1½" (0.148 x 1.5") nails.
5. Nails attaching clip to wall plates are 8d (0.131 x 2.5") or 10d (0.148 x 3") nails.
6. Loading in the F1 direction indicates shear forces parallel to the plane of the wall. Refer to manufacturer literature for further details (See **Figure 49**).
7. Loading in the F2 direction indicates shear forces perpendicular to the plane of the wall. Refer to manufacturer literature for further details (See **Figure 49**).

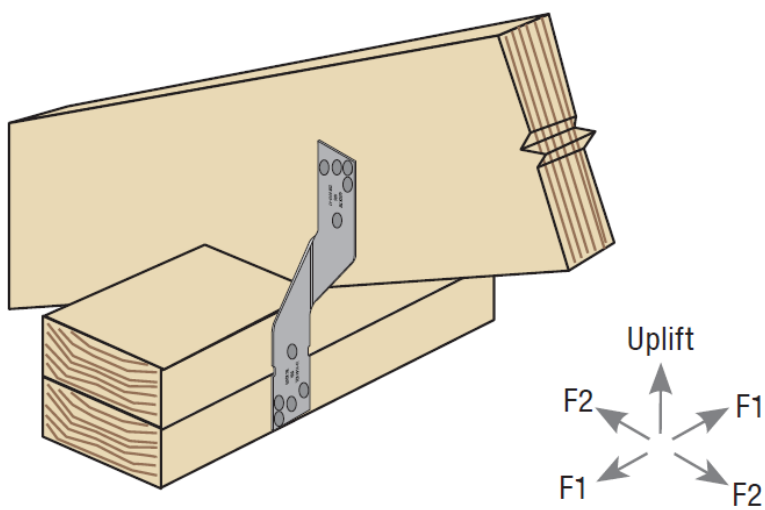

Figure 49. HA8 Load Directions

Information contained in this report was developed using report holder's confidential intellectual property (IP) and trade secrets (TS), which is protected by Defend Trade Secrets Act 2016, © DrJ Engineering, LLC

Table 7. HA10, HA10-2, and HA10R Hurricane and Seismic Anchor Allowable Loads

Species (Specific Gravity)	Fasteners				Allowable Load[1,2] (lbs)			
	To Rafter/Truss		To Top Plates		Uplift		Lateral – F1[2]	Lateral – F2[3]
					Load Duration Factor, C_D			
	Type	Quantity	Type	Quantity	1.0	1.6	1.6	1.6
SP (0.55)	10d x 1½ (0.148 x 1.5")	9	10d x 1½ (0.148 x 1.5")	8	1,005	1,140	560	335
			10d common (0.148 x 3")			1,350		300
DF-L (0.50)		9	10d x 1½ (0.148 x 1.5")	8	930	1,055	515	310
			10d common (0.148 x 3")			1,245		280
SPF (0.42)		9	10d x 1½ (0.148 x 1.5")	8	800	910	335	220
			10d common (0.148 x 3")			1,075		230

SI: 1 in = 25.4 mm, 1 lb = 4.45 N

1. Refer to **Appendix A**. General Notes for Tables.
2. Loading in the F1 direction indicate shear forces parallel to the plane of the wall, one side of connection to rafter/truss in withdrawal (see **Figure 50**).
3. Loading in the F2 direction indicate shear forces perpendicular to the plane of the wall, connection to top plate in withdrawal (see **Figure 50**).

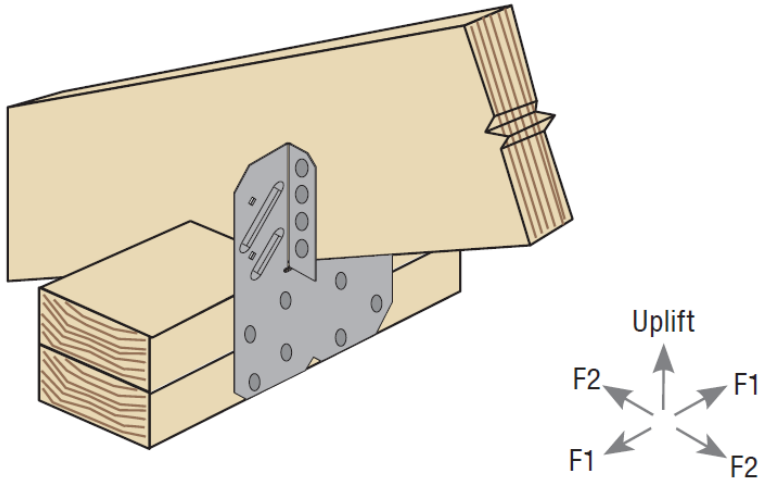

Figure 50. HA10 Load Directions

Information contained in this report was developed using report holder's confidential intellectual property (IP) and trade secrets (TS), which is protected by Defend Trade Secrets Act 2016, © DrJ Engineering, LLC

6.2.4 *Quick Connector LS and MS Series Flat Straps, and LTS, MTS, and HTS Series Twist Straps:*

6.2.4.1 Allowable loads for the LS and MS Straps, and MTS and HTS Twist Straps are provided in **Table 8** through **Table 12**.

6.2.4.2 The nail sizes and nailing schedules are provided in:

6.2.4.2.1 **Table 8** for the LS Series Straps

6.2.4.2.2 **Table 9** for the MS Series Straps

6.2.4.2.3 **Table 10** for the LTS Series Twist Straps

6.2.4.2.4 **Table 11** for the MTS Series Twist Straps

6.2.4.2.5 **Table 12** for the HTS Series Twist Straps

Table 8. LS Series Strap Allowable Tension Loads

Model Number	Fasteners		Allowable Tension Load[1,2,3] (lbs)					
			SP (0.55)		DF-L (0.50)		SPF (0.42)	
	Size	Number of Nails Each End of Strap	Load Duration Factor, C_D[2]					
			1.0	1.6	1.0	1.6	1.0	1.6
LS9	8d (0.131 x 2.5")	4	415	665	385	615	330	525
LS12		5	520	830	480	770	410	655
LS18		7	730	1,165	670	1,075	575	920
LS21		8	830	1,295	770	1,230	655	1,050
LS24		9	935	1,295	865	1,295	740	1,180
LS9	10d x 1 1/2" (0.148 x 1.5")	4	500	800	460	735	390	625
LS12		5	625	1,000	575	920	490	785
LS18		7	875	1,295	805	1,290	685	1,100
LS21		8	1,000	1,295	920	1,295	785	1,255
LS24		9	1,125	1,295	1,035	1,295	880	1,295
LS9	10d (0.148 x 3")	4	505	805	465	740	395	635
LS12		5	630	1,010	580	930	495	790
LS18		7	880	1,295	810	1,295	695	1,110
LS21		8	1,010	1,295	930	1,295	790	1,265
LS24		9	1,135	1,295	1,045	1,295	890	1,295

SI: 1 in = 25.4 mm, 1 lb = 4.45 N

1. Refer to **Appendix A**. General Notes for Tables.
2. Allowable tension loads apply for uplift when the straps are installed vertically.
3. Allowable tension loads for load durations of two months (i.e., 115%) and seven days (i.e., 125%) may be obtained by multiplying the corresponding allowable tension load in the load duration factor column marked *"1.0"* by 1.15 or 1.25 respectively, with a maximum of 1,295 lbs.

Information contained in this report was developed using report holder's confidential intellectual property (IP) and trade secrets (TS), which is protected by Defend Trade Secrets Act 2016, © DrJ Engineering, LLC

Table 9. MS Series Strap Allowable Tension Loads

Model Number	Fasteners		Allowable Tension Load[1,2,3] (lbs)					
			SP (0.55)		DF-L (0.50)		SPF (0.42)	
	Size	Number of Nails Each End of Strap	Load Duration Factor, C_D[2]					
			1.0	1.6	1.0	1.6	1.0	1.6
MS24	8d (0.131 x 2.5")	9	980	1,570	910	1,455	785	1,255
MS27		10	1,090	1,745	1,010	1,615	870	1,390
MS30		11	1,200	1,920	1,110	1,780	955	1,530
MS36		13	1,415	2,120	1,315	2,100	1,130	1,810
MS39		14	1,525	2,120	1,415	2,120	1,220	1,950
MS48		14	1,525	2,120	1,415	2,120	1,220	1,950
MS24	10d x 1 1/2" (0.148 x 1.5")	9	1,150	1,845	1,060	1,700	910	1,455
MS27		10	1,280	2,050	1,180	1,890	1,010	1,615
MS30		11	1,410	2,120	1,300	2,075	1,110	1,780
MS36		13	1,665	2,120	1,535	2,120	1,315	2,100
MS39		14	1,790	2,120	1,650	2,120	1,415	2,120
MS48		14	1,790	2,120	1,650	2,120	1,415	2,120
MS24	10d (0.148 x 3")	9	1,180	1,885	1,090	1,740	935	1,500
MS27		10	1,310	2,095	1,210	1,935	1,040	1,665
MS30		11	1,440	2,120	1,330	2,120	1,145	1,830
MS36		13	1,705	2,120	1,575	2,120	1,350	2,120
MS39		14	1,835	2,120	1,695	2,120	1,455	2,120
MS48		14	1,835	2,120	1,695	2,120	1,455	2,120

SI: 1 in = 25.4 mm, 1 lb = 4.45 N

1. Refer to **Appendix A**. General Notes for Tables.
2. Allowable tension loads apply for uplift when the straps are installed vertically.
3. Allowable tension loads for load durations of two months (i.e., 115%) and seven days (i.e., 125%) may be obtained by multiplying the corresponding allowable tension load in the load duration factor column marked *"1.0"* by 1.15 or 1.25, respectively, with a maximum of 2,118 lbs.

Information contained in this report was developed using report holder's confidential intellectual property (IP) and trade secrets (TS), which is protected by Defend Trade Secrets Act 2016, © DrJ Engineering, LLC

Table 10. LTS Twist Strap Allowable Tension Loads

Model Number	Fasteners			Allowable Load[1,2,3] (lbs)					
				SP (0.55)		DF-L (0.50)		SPF (0.42)	
	Type	Min No. of Nails per Strap[4]	Min No. of Nails at Each End	Load Duration Factor, C_D					
				1.0	1.6	1.0	1.6	1.0	1.6
LTS12-3Z	10d x 1½" (0.148 x 1.5")	12	6	755	875	695	810	600	700
LTS16-3Z									
LTS18-3Z	10d (0.148 x 3")								
LTS20-3Z									

SI: 1 in = 25.4 mm, 1 lb = 4.45 N

1. Refer to **Appendix A**. General Notes for Tables.
2. Straps do not have to be wrapped over the truss or rafter to achieve the loads shown.
3. Straps may be installed on either side of the framing member.
4. The number of fasteners shown in the table is the minimum required to achieve the loads shown.

Table 11. MTS Twist Strap Allowable Tension Loads

Model Number	Fasteners			Allowable Load[1,2,3] (lbs)					
				SP (0.55)		DF-L (0.50)		SPF (0.42)	
	Type	Min No. of Nails per Strap[4]	Min No. of Nails at Each End	Load Duration Factor, C_D					
				1.0	1.6	1.0	1.6	1.0	1.6
MTS12-3Z	10d x 1½" (0.148 x 1.5")	14	7	895	1,085	825	1,000	715	865
MTS16-3Z									
MTS20-3Z	10d (0.148 x 3")								
MTS24-3Z									

SI: 1 in = 25.4 mm, 1 lb = 4.45 N

1. Refer to **Appendix A**. General Notes for Tables.
2. Straps do not have to be wrapped over the truss or rafter to achieve the loads shown.
3. Straps may be installed on either side of the framing member.
4. The number of fasteners shown in the table is the minimum required to achieve the loads shown.

Information contained in this report was developed using report holder's confidential intellectual property (IP) and trade secrets (TS), which is protected by Defend Trade Secrets Act 2016, © DrJ Engineering, LLC

Table 12. HTS Twist Strap Allowable Tension Loads

Model Number	Fasteners			Allowable Load[1,2,3] (lbs)					
				SP (0.55)		DF-L (0.50)		SPF (0.42)	
	Type	Min No. of Nails per Strap[4]	Min No. of Nails at Each End	Load Duration Factor, C_D					
				1.0	1.6	1.0	1.6	1.0	1.6
HTS16-3Z	10d x 1½" (0.148 x 1.5")	22	11	1,445	1,665	1,340	1,540	1,160	1,330
HTS20-3Z									
HTS24-3Z	10d (0.148 x 3")								
HTS28-3Z									

SI: 1 in = 25.4 mm, 1 lb = 4.45 N

1. Refer to **Appendix A**. General Notes for Tables.
2. Straps do not have to be wrapped over the truss or rafter to achieve the loads shown.
3. Straps may be installed on either side of the framing member.
4. The number of fasteners shown in the table is the minimum required to achieve the loads shown.

6.2.5 *Quick Connector CS20-250, CS18-200, CS16-150, and CS14-100 Coiled Straps:*

6.2.5.1 Allowable loads for the CS20-250, CS18-200, CS16-150, and CS14-100 Coiled Straps are provided in **Table 13** through **Table 16**.

6.2.5.2 The nail sizes and nailing schedules are provided in:

6.2.5.2.1 **Table 13** for the CS20-250

6.2.5.2.2 **Table 14** for the CS18-200

6.2.5.2.3 **Table 15** for the CS16-150

6.2.5.2.4 **Table 16** for the CS14-100

Information contained in this report was developed using report holder's confidential intellectual property (IP) and trade secrets (TS), which is protected by Defend Trade Secrets Act 2016, © DrJ Engineering, LLC

Table 13. CS20-250 Coiled Straps Allowable Tension Load

Fasteners		Minimum Required End Length[3] (in)	Allowable Tension Load[1,2] (lbs)					
			SP (0.55)		DF-L (0.50)		SPF (0.42)	
Size	# Each End of Strap		Load Duration Factor, C_D[2]					
			1.0	1.6	1.0	1.6	1.0	1.6
8d x 1½" (0.131 x 1.5") and 8d Common (0.131 x 2.5")	4	3	415	670	385	615	330	530
	6	4½	625	1,000	575	925	495	795
	8	6	835	1,335	770	1,230	660	1,060
	10	7½	1,045	1,345	960	1,345	830	1,325
	11	8¼	1,145	1,345	1,060	1,345	910	1,345
	12	9	1,250	1,345	1,155	1,345	995	1,345
	13	9¾	1,345	1,345	1,250	1,345	1,075	1,345
	14	10½	1,345	1,345	1,345	1,345	1,160	1,345
	15	11¼	1,345	1,345	1,345	1,345	1,240	1,345
	16	12	1,345	1,345	1,345	1,345	1,325	1,345
	17	12¾	1,345	1,345	1,345	1,345	1,345	1,345
10d x 1½" (0.148 x 1.5") and 10d Common (0.148 x 3")	4	3	505	805	465	745	400	640
	6	4½	755	1,210	695	1,115	600	960
	8	6	1,005	1,345	930	1,345	800	1,280
	9	6¾	1,135	1,345	1,045	1,345	900	1,345
	10	7½	1,260	1,345	1,160	1,345	1,000	1,345
10d x 1½" (0.148 x 1.5") and 10d Common (0.148 x 3")	11	8¼	1,345	1,345	1,275	1,345	1,100	1,345
	12	9	1,345	1,345	1,345	1,345	1,200	1,345
	13	9¾	1,345	1,345	1,345	1,345	1,300	1,345
	14	10½	1,345	1,345	1,345	1,345	1,345	1,345

SI: 1 in = 25.4 mm, 1 lb = 4.45 N

1. Refer to **Appendix A**. General Notes for Tables.
2. Allowable tension loads apply for uplift when the straps are installed vertically.
3. The total strap cut length is equal to the Clear Span + 2x End Length. See **Figure 51** for more detail.

Information contained in this report was developed using report holder's confidential intellectual property (IP) and trade secrets (TS), which is protected by Defend Trade Secrets Act 2016, © DrJ Engineering, LLC

Table 14. CS18-200 Coiled Straps Allowable Tension Load

Fasteners		Minimum Required End Length[3] (in)	Allowable Tension Load[1,2] (lbs)					
			SP (0.55)		DF-L (0.50)		SPF (0.42)	
Size	# Each End of Strap		Load Duration Factor, C_D[2]					
			1.0	1.6	1.0	1.6	1.0	1.6
8d x 1½" (0.131 x 1.5") and 8d Common (0.131 x 2.5")	4	3	425	680	395	630	340	545
	6	4½	640	1,020	590	945	510	815
	8	6	850	1,365	785	1,260	680	1,085
	10	7½	1,065	1,705	985	1,575	850	1,355
	12	9	1,280	1,775	1,180	1,775	1,015	1,630
	14	10½	1,490	1,775	1,375	1,775	1,185	1,775
	16	12	1,705	1,775	1,575	1,775	1,355	1,775
	17	12¾	1,775	1,775	1,670	1,775	1,440	1,775
	18	13½	1,775	1,775	1,770	1,775	1,525	1,775
	19	14¼	1,775	1,775	1,775	1,775	1,610	1,775
	20	15	1,775	1,775	1,775	1,775	1,695	1,775
	21	15¾	1,775	1,775	1,775	1,775	1,775	1,775
10d x 1½" (0.148 x 1.5") and 10d Common (0.148 x 3")	4	3	510	820	475	755	410	650
	6	4½	770	1,230	710	1,135	610	980
	8	6	1,025	1,640	945	1,515	815	1,305
	10	7½	1,280	1,775	1,180	1,775	1,020	1,630
	11	8¼	1,410	1,775	1,300	1,775	1,120	1,775
	12	9	1,535	1,775	1,420	1,775	1,225	1,775
	13	9¾	1,665	1,775	1,535	1,775	1,325	1,775
	14	10½	1,775	1,775	1,655	1,775	1,425	1,775
	15	11¼	1,775	1,775	1,775	1,775	1,530	1,775
	16	12	1,775	1,775	1,775	1,775	1,630	1,775
	17	12¾	1,775	1,775	1,775	1,775	1,730	1,775
	18	13½	1,775	1,775	1,775	1,775	1,775	1,775

SI: 1 in = 25.4 mm, 1 lb = 4.45 N

1. Refer to **Appendix A**. General Notes for Tables.
2. Allowable tension loads apply for uplift when the straps are installed vertically.
3. The total strap cut length is equal to the Clear Span + 2x End Length. See **Figure 51** for more detail.

Information contained in this report was developed using report holder's confidential intellectual property (IP) and trade secrets (TS), which is protected by Defend Trade Secrets Act 2016, © DrJ Engineering, LLC

Table 15. CS16-150 Coiled Straps Allowable Tension Load

Fasteners		Minimum Required End Length[3] (in)	Allowable Tension Load[1,2] (lbs)					
			SP (0.55)		DF-L (0.50)		SPF (0.42)	
Size	# Each End of Strap		Load Duration Factor, C_D[2]					
			1.0	1.6	1.0	1.6	1.0	1.6
8d x 1½" (0.131 x 1.5") and 8d Common (0.131 x 2.5")	4	3	440	700	405	650	350	560
	6	4½	660	1,050	610	970	525	840
	8	6	875	1,405	810	1,295	700	1,120
	10	7½	1,095	1,755	1,015	1,620	875	1,400
	12	9	1,315	2,105	1,215	1,945	1,050	1,680
	14	10½	1,535	2,205	1,420	2,205	1,225	1,960
	16	12	1,755	2,205	1,620	2,205	1,400	2,205
	18	13½	1,975	2,205	1,825	2,205	1,575	2,205
	20	15	2,190	2,205	2,025	2,205	1,750	2,205
	21	15¾	2,205	2,205	2,125	2,205	1,835	2,205
	22	16½	2,205	2,205	2,205	2,205	1,925	2,205
	24	18	2,205	2,205	2,205	2,205	2,100	2,205
	26	19½	2,205	2,205	2,205	2,205	2,205	2,205
10d x 1½" (0.148 x 1.5") and 10d Common (0.148 x 3")	4	3	525	840	485	775	420	670
	6	4½	790	1,260	730	1,165	630	1,005
	8	6	1,050	1,680	970	1,555	840	1,340
	10	7½	1,315	2,100	1,215	1,940	1,045	1,675
	12	9	1,575	2,205	1,455	2,205	1,255	2,010
	14	10½	1,840	2,205	1,700	2,205	1,465	2,205
	16	12	2,100	2,205	1,940	2,205	1,675	2,205
	18	13½	2,205	2,205	2,185	2,205	1,885	2,205
	20	15	2,205	2,205	2,205	2,205	2,095	2,205
	22	16½	2,205	2,205	2,205	2,205	2,205	2,205

SI: 1 in = 25.4 mm, 1 lb = 4.45 N

1. Refer to **Appendix A**. General Notes for Tables.
2. Allowable tension loads apply for uplift when the straps are installed vertically.
3. The total strap cut length is equal to the Clear Span + 2x End Length. See **Figure 51** for more detail.

Information contained in this report was developed using report holder's confidential intellectual property (IP) and trade secrets (TS), which is protected by Defend Trade Secrets Act 2016, © DrJ Engineering, LLC

Table 16. CS14-100 Coiled Straps Allowable Tension Load

Fasteners		Minimum Required End Length[3] (in)	Allowable Tension Load[1,2] (lbs)					
			SP (0.55)		DF-L (0.50)		SPF (0.42)	
Size	# Each End of Strap		Load Duration Factor, C_D[2]					
			1.0	1.6	1.0	1.6	1.0	1.6
8d x 1½" (0.131 x 1.5") and 8d Common (0.131 x 2.5")	4	3	455	730	425	675	365	585
	6	4½	685	1,100	635	1,015	550	880
	8	6	915	1,465	845	1,355	730	1,170
	10	7½	1,145	1,830	1,060	1,690	915	1,465
	12	9	1,370	2,195	1,270	2,030	1,100	1,755
	14	10½	1,600	2,560	1,480	2,370	1,280	2,050
	16	12	1,830	2,720	1,690	2,710	1,465	2,345
8d x 1½" (0.131 x 1.5") and 8d Common (0.131 x 2.5")	18	13½	2,060	2,720	1,905	2,720	1,645	2,635
	20	15	2,285	2,720	2,115	2,720	1,830	2,720
	22	16½	2,515	2,720	2,325	2,720	2,015	2,720
	24	18	2,720	2,720	2,540	2,720	2,195	2,720
	25	18¾	2,720	2,720	2,645	2,720	2,290	2,720
	26	19½	2,720	2,720	2,720	2,720	2,380	2,720
	27	20¼	2,720	2,720	2,720	2,720	2,470	2,720
	28	21	2,720	2,720	2,720	2,720	2,560	2,720
	29	21¾	2,720	2,720	2,720	2,720	2,655	2,720
	30	22½	2,720	2,720	2,720	2,720	2,720	2,720
10d x 1½" (0.148 x 1.5") and 10d Common (0.148 x 3")	4	3	545	870	505	805	435	695
	6	4½	820	1,310	755	1,210	655	1,045
	8	6	1,090	1,745	1,010	1,615	870	1,395
	10	7½	1,365	2,180	1,260	2,015	1,090	1,745
	12	9	1,635	2,615	1,510	2,420	1,305	2,090
	14	10½	1,910	2,720	1,765	2,720	1,525	2,440
	16	12	2,180	2,720	2,015	2,720	1,745	2,720
	18	13½	2,455	2,720	2,270	2,720	1,960	2,720
	20	15	2,720	2,720	2,520	2,720	2,180	2,720
	21	15¾	2,720	2,720	2,645	2,720	2,290	2,720
10d x 1½" (0.148 x 1.5") and 10d Common (0.148 x 3")	22	16½	2,720	2,720	2,720	2,720	2,395	2,720
	23	17¼	2,720	2,720	2,720	2,720	2,505	2,720
	24	18	2,720	2,720	2,720	2,720	2,615	2,720
	25	18¾	2,720	2,720	2,720	2,720	2,720	2,720

SI: 1 in = 25.4 mm, 1 lb = 4.45 N

1. Refer to **Appendix A**. General Notes for Tables.
2. Allowable tension loads apply for uplift when the straps are installed vertically.
3. The total strap cut length is equal to the Clear Span + 2x End Length. See **Figure 51** for more detail.

Information contained in this report was developed using report holder's confidential intellectual property (IP) and trade secrets (TS), which is protected by Defend Trade Secrets Act 2016, © DrJ Engineering, LLC

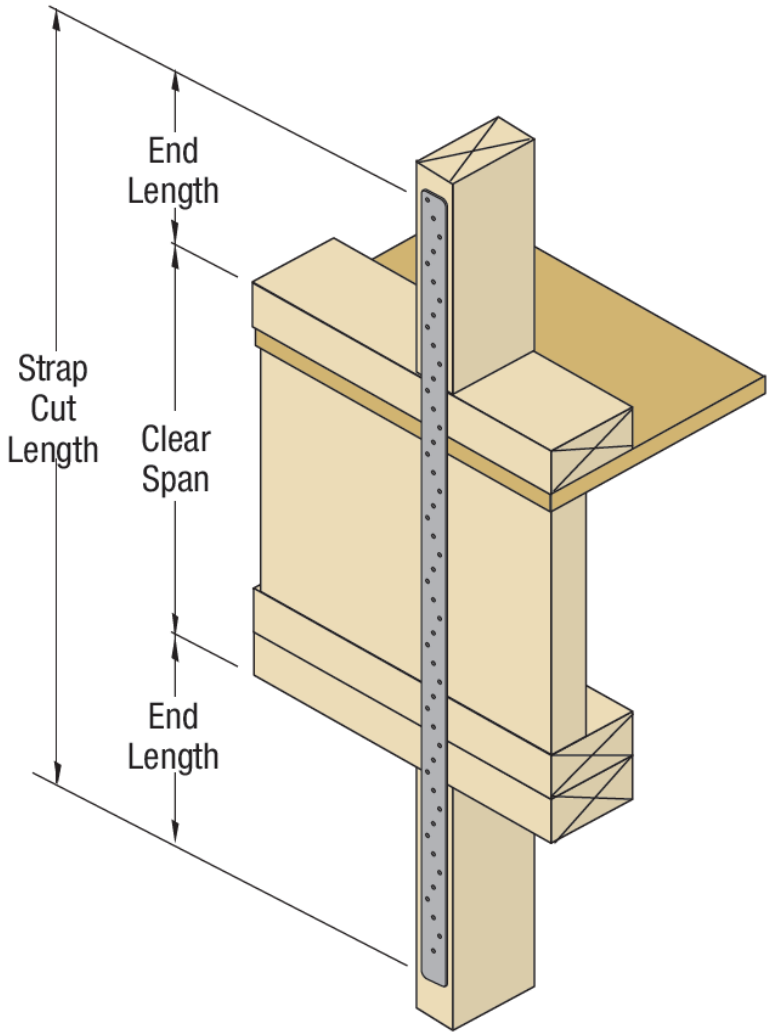

Figure 51. Coiled Straps – Total Cut Length

Information contained in this report was developed using report holder's confidential intellectual property (IP) and trade secrets (TS), which is protected by Defend Trade Secrets Act 2016, © DrJ Engineering, LLC

6.2.6 *Quick Connector CMST16-54, CMST14-52.5, and CMST12-40 Coiled Straps:*

6.2.6.1 Allowable loads for the CMST16-54, CMST14-52.5, and CMST12-40 Coiled Straps are presented in **Table 17** through **Table 19**.

6.2.6.2 The nail sizes and nailing schedules are provided in:

6.2.6.2.1 **Table 17** for the CMST16-54

6.2.6.2.2 **Table 18** for the CMST14-52.5

6.2.6.2.3 **Table 19** for the CMST12-40

Table 17. CMST16-54 Coiled Straps Allowable Tension Load

Fasteners		Minimum Required End Length[3] (in)	Allowable Tension Load[1,2] (lbs)					
			SP (0.55)		DF-L (0.50)		SPF (0.42)	
Size	# Each End of Strap		Load Duration Factor, C_D[2]					
			1.0	1.6	1.0	1.6	1.0	1.6
10d Common (0.148 x 3")	6	4 1/2	790	1,260	730	1,165	630	1,005
	12	9	1,575	2,520	1,455	2,330	1,255	2,010
	18	13 1/2	2,365	3,780	2,185	3,495	1,885	3,015
	24	18	3,150	5,040	2,910	4,660	2,515	4,020
	30	22 1/2	3,940	5,295	3,640	5,295	3,140	5,025
	36	27	4,725	5,295	4,365	5,295	3,770	5,295
	42	31 1/2	5,295	5,295	5,095	5,295	4,395	5,295
	48	36	5,295	5,295	5,295	5,295	5,025	5,295
	54	40 1/2	5,295	5,295	5,295	5,295	5,295	5,295
16d Common (0.162 x 3.5")	6	4 1/2	935	1,495	860	1,380	745	1,190
	12	9	1,865	2,985	1,725	2,755	1,485	2,380
	18	13 1/2	2,800	4,480	2,585	4,135	2,230	3,565
	24	18	3,730	5,295	3,445	5,295	2,970	4,755
	30	22 1/2	4,665	5,295	4,305	5,295	3,715	5,295
	36	27	5,295	5,295	5,170	5,295	4,460	5,295
	42	31 1/2	5,295	5,295	5,295	5,295	5,200	5,295
	48	36	5,295	5,295	5,295	5,295	5,295	5,295

SI: 1 in = 25.4 mm, 1 lb = 4.45 N

1. Refer to **Appendix A**. General Notes for Tables.
2. Allowable tension loads apply for uplift when the straps are installed vertically.
3. The total strap cut length is equal to the Clear Span + 2x End Length. See **Figure 51** for more detail.

Information contained in this report was developed using report holder's confidential intellectual property (IP) and trade secrets (TS), which is protected by Defend Trade Secrets Act 2016, © DrJ Engineering, LLC

Table 18. CMST14-52.5 Coiled Straps Allowable Tension Load

Fasteners		Minimum Required End Length[3] (in)	Allowable Tension Load[1,2] (lbs)					
			SP (0.55)		DF-L (0.50)		SPF (0.42)	
Size	# Each End of Strap		Load Duration Factor, C_D[2]					
			1.0	1.6	1.0	1.6	1.0	1.6
10d Common (0.148 x 3")	6	4 1/2	820	1,310	755	1,210	655	1,045
	12	9	1,635	2,615	1,510	2,420	1,305	2,090
	18	13 1/2	2,455	3,925	2,270	3,630	1,960	3,140
	24	18	3,270	5,235	3,025	4,840	2,615	4,185
	30	22 1/2	4,090	6,525	3,780	6,050	3,270	5,230
	36	27	4,905	6,525	4,535	6,525	3,920	6,275
	42	31 1/2	5,725	6,525	5,295	6,525	4,575	6,525
	48	36	6,525	6,525	6,050	6,525	5,230	6,525
	54	40 1/2	6,525	6,525	6,525	6,525	5,885	6,525
	60	45	6,525	6,525	6,525	6,525	6,525	6,525
16d Common (0.162 x 3.5")	6	4 1/2	960	1,540	890	1,425	770	1,230
	12	9	1,925	3,080	1,780	2,845	1,535	2,460
	18	13 1/2	2,885	4,620	2,670	4,270	2,305	3,690
	24	18	3,850	6,160	3,560	5,690	3,075	4,920
	30	22 1/2	4,810	6,525	4,445	6,525	3,840	6,145
	36	27	5,775	6,525	5,335	6,525	4,610	6,525
	42	31 1/2	6,525	6,525	6,225	6,525	5,380	6,525
	48	36	6,525	6,525	6,525	6,525	6,145	6,525
	54	40 1/2	6,525	6,525	6,525	6,525	6,525	6,525

SI: 1 in = 25.4 mm, 1 lb = 4.45 N

1. Refer to **Appendix A**. General Notes for Tables.
2. Allowable tension loads apply for uplift when the straps are installed vertically.
3. The total strap cut length is equal to the Clear Span + 2x End Length. See **Figure 51** for more detail.

Information contained in this report was developed using report holder's confidential intellectual property (IP) and trade secrets (TS), which is protected by Defend Trade Secrets Act 2016, © DrJ Engineering, LLC

Table 19. CMST12-40 Coiled Straps Allowable Tension Load

Fasteners		Minimum Required End Length[3] (in)	Allowable Tension Load[1,2] (lbs)					
			SP (0.55)		DF-L (0.50)		SPF (0.42)	
Size	# Each End of Strap		Load Duration Factor, C_D[2]					
			1.0	1.6	1.0	1.6	1.0	1.6
10d Common (0.148 x 3")	6	4 1/2	905	1,450	840	1,340	725	1,165
	12	9	1,810	2,900	1,680	2,685	1,455	2,330
	18	13 1/2	2,715	4,345	2,515	4,025	2,180	3,490
	24	18	3,620	5,795	3,355	5,370	2,910	4,655
	30	22 1/2	4,530	7,245	4,195	6,710	3,635	5,820
	36	27	5,435	8,695	5,035	8,055	4,365	6,985
	42	31 1/2	6,340	9,255	5,870	9,255	5,090	8,150
	48	36	7,245	9,255	6,710	9,255	5,820	9,255
	54	40 1/2	8,150	9,255	7,550	9,255	6,545	9,255
	60	45	9,055	9,255	8,390	9,255	7,275	9,255
	66	49 1/2	9,255	9,255	9,230	9,255	8,000	9,255
	72	54	9,255	9,255	9,255	9,255	8,730	9,255
	78	58 1/2	9,255	9,255	9,255	9,255	9,255	9,255
16d Common (0.162 x 3.5")	6	4 1/2	1,050	1,680	975	1,555	845	1,350
	12	9	2,100	3,365	1,945	3,115	1,685	2,700
	18	13 1/2	3,155	5,045	2,920	4,670	2,530	4,050
	24	18	4,205	6,725	3,890	6,230	3,375	5,395
	30	22 1/2	5,255	8,405	4,865	7,785	4,215	6,745
	36	27	6,305	9,255	5,840	9,255	5,060	8,095
	42	31 1/2	7,355	9,255	6,810	9,255	5,905	9,255
	48	36	8,405	9,255	7,785	9,255	6,745	9,255
	54	40 1/2	9,255	9,255	8,760	9,255	7,590	9,255
	60	45	9,255	9,255	9,255	9,255	8,435	9,255
	66	49 1/2	9,255	9,255	9,255	9,255	9,255	9,255

SI: 1 in = 25.4 mm, 1 lb = 4.45 N

1. Refer to **Appendix A**. General Notes for Tables.
2. Allowable tension loads apply for uplift when the straps are installed vertically.
3. The total strap cut length is equal to the Clear Span + 2x End Length. See **Figure 51** for more detail.

Information contained in this report was developed using report holder's confidential intellectual property (IP) and trade secrets (TS), which is protected by Defend Trade Secrets Act 2016, © DrJ Engineering, LLC

6.2.7 *Quick Connector SC34 and SC35 Framing Angles and SC35F Framing Plate:*

6.2.7.1 Nail sizes, nail schedule, and allowable loads for the SC34 and SC35 Framing Angle and SC35F Framing Plate are provided in **Table 20**, **Table 21**, and **Table 22**, respectively.

Table 20. SC34 Framing Angle Allowable Loads

Species (Specific Gravity)	Fasteners		Allowable Load[1,2,4,5] (lbs)					
			Load Direction F1		Load Direction F2		Load Direction F3[3]	
	Type	Total	Load Duration Factor, C_D					
			1.0	1.6	1.0	1.6	1.0	1.6
SP (0.55)	8d x 1½" (0.131 x 1.5")	8	425	685	425	685	215	325
DF-L (0.50)	8d x 1½" (0.131 x 1.5")	8	395	630	395	630	170	255
SPF (0.42)	8d x 1½" (0.131 x 1.5")	8	340	545	340	540	110	175

SI: 1 in = 25.4 mm, 1 lb = 4.4575

1. Refer to **Appendix A**. General Notes for Tables.
2. Tabulated loads are per connector.
3. Connectors are required on both sides of the joist to achieve the F3 loads in both directions.
4. When connectors are installed directly across from each other on both sides of the joist, the thickness of the joist should be twice the length of the fastener.
5. Refer to **Figure 52** for an illustration of directions F1, F2, and F3.

Table 21. SC35 Framing Angle Allowable Loads

Species (Specific Gravity)	Fasteners		Allowable Load[1,2,4,5] (lbs)					
			Load Direction F1		Load Direction F2		Load Direction F3[3]	
	Type	Total	Load Duration Factor, C_D					
			1.0	1.6	1.0	1.6	1.0	1.6
SP (0.55)	10d x 1½" (0.148 x 1.5")	12	755	840	755	1,075	295	295
	10d (0.148 x 3")	12	770	940	770	1,015	260	260
DF-L (0.50)	10d x 1½" (0.148 x 1.5")	12	695	765	695	975	265	265
	10d (0.148 x 3")	12	710	840	710	905	235	235
SPF (0.42)	10d x 1½" (0.148 x 1.5")	12	595	650	595	830	200	230
	10d (0.148 x 3")	12	605	720	605	775	200	200

SI: 1 in = 25.4 mm, 1 lb = 4.45 N

1. Refer to **Appendix A**. General Notes for Tables.
2. Tabulated loads are per connector.
3. Connectors are required on both sides of the joist to achieve the F3 loads in both directions.
4. When connectors are installed directly across from each other on both sides of the joist, the thickness of the joist should be twice the length of the fastener.
5. Refer to **Figure 52** for an illustration of directions F1, F2, and F3.

Information contained in this report was developed using report holder's confidential intellectual property (IP) and trade secrets (TS), which is protected by Defend Trade Secrets Act 2016, © DrJ Engineering, LLC

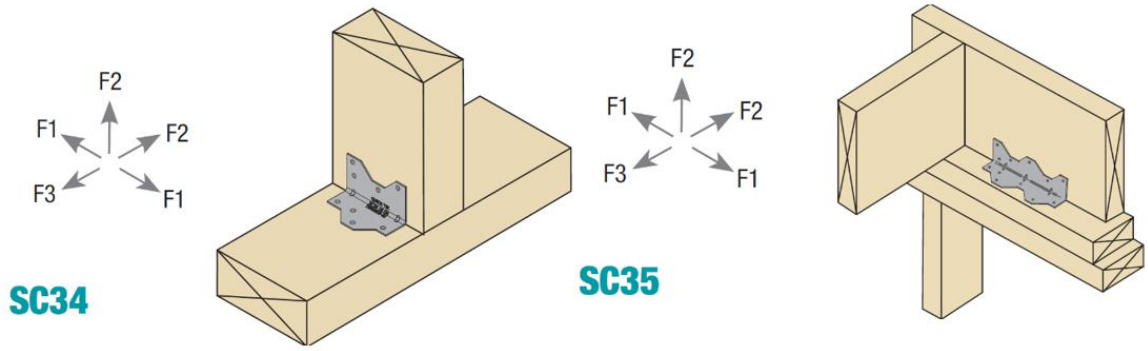

Figure 52. Illustration of Load Directions F1, F2, and F3 for the SC34 and SC35 Framing Angle

Table 22. SC35F Framing Plate Allowable Loads

Species (Specific Gravity)	Fasteners		Allowable Load[1,2] (lbs)			
			Uplift – F5		Lateral – F4	
	Type	Total	Load Duration Factor, C_D			
			1.0	1.6	1.0	1.6
SP (0.55)	10d x 1½" (0.148 x 1.5")	12	500	500	755	775
	10d (0.148 x 3")	12	550	550	735	735
DF-L (0.50)	10d x 1½" (0.148 x 1.5")	12	430	430	655	655
	10d (0.148 x 3")	12	470	470	615	615
SPF (0.42)	10d x 1½" (0.148 x 1.5")	12	370	370	560	560
	10d (0.148 x 3")	12	400	400	525	525

SI: 1 in = 25.4 mm, 1 lb = 4.45 N

1. Refer to **Appendix A**. General Notes for Tables.
2. Refer to **Figure 53** for an illustration of directions F4 and F5.

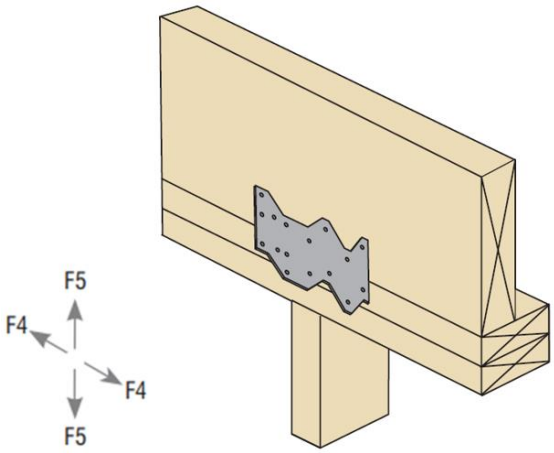

Figure 53. Illustration of Load Directions F4 and F5 for the SC35F Framing Plate

Information contained in this report was developed using report holder's confidential intellectual property (IP) and trade secrets (TS), which is protected by Defend Trade Secrets Act 2016, © DrJ Engineering, LLC

6.2.8 *Quick Connector HGA Gusset Angle:*

6.2.8.1 The screw sizes, screw schedules and allowable loads for the HGA and HGAM gusset angles are provided in **Table 23**.

Table 23. HGA and HGAM Gusset Angle Allowable Loads

Species (Specific Gravity)	Fasteners[5]				Allowable Load[1] (lbs)			
					Uplift	F1[2]	F2[3]	F3[4]
	To Rafter/Truss		To Top Plate or Concrete		Load Duration Factor, C_D			
	Type[6]	Quantity	Type[7,8]	Quantity	1.0	1.6	1.0	1.6
DF-L (0.50)	Wood, 1/4" x 1 1/2" (Note 9)	4	Wood, 1/4" x 3" (Note 11 below)	4	1,085	1,085	895	1,150
			Concrete, 1/4" x 2 1/4" (Note 13 below)	4	815	1,005	955	1,005
SPF (0.42)	Wood, 1/4" x 1 1/2" (Note 10)	4	Wood, 1/4" x 3" (Note 12 below)	4	740	695	420	825
			Concrete, 1/4" x 2 1/4" (Note 13 below)	4	815	805	505	825

SI: 1 in = 25.4 mm, 1 lb = 4.45 N

1. Refer to **Appendix A**. General Notes for Tables.
2. Loading in the F1 direction indicates shear forces parallel to the plane of the wall (**Figure 54**).
3. Loading in the F2 direction indicates shear forces perpendicular to the plane of the wall, acting towards the gusset angle (**Figure 54**).
4. Loading in the F3 direction indicates shear forces perpendicular to the plane of the wall, acting away from the gusset angle (**Figure 54**).
5. Minimum fastener penetration must be equal to the screw length less the thickness of the metal side plate.
6. Minimum Specified Wood Screw Requirements: Major Diameter = 0.25", Minor (Root) Diameter = 0.185", Thread Length (including tip) = 1.25", Bending Yield Strength = 180,000-psi
7. Minimum Specified Wood Screw Requirements: Major Diameter = 0.25", Minor (Root) Diameter = 0.185", Thread Length (including tip) = 2.25", Bending Yield Strength = 180,000-psi
8. Minimum Specified Masonry screws Requirements: Major Diameter = 0.25", Thread Length = 1.75", Minimum F_y and F_u = 80,000-psi and 100,000-psi
9. Screw minimum Reference Lateral Design Value (Z) = 182 lbs, Minimum Reference Withdrawal Value (W) = 164 lbs/in
10. Screw minimum Reference Lateral Design Value (Z) = 136 lbs, Minimum Reference Withdrawal Value (W) = 103 lbs/in
11. Screw minimum Reference Lateral Design Value (Z) = 244 lbs, Minimum Reference Withdrawal Value (W) = 179 lbs/in
12. Screw minimum Reference Lateral Design Value (Z) = 210 lbs, Minimum Reference Withdrawal Value (W) = 126 lbs/in
13. Minimum Allowable Tension (T) and Shear (S) Capacities When Installed in Concrete, T = 204 lb and S = 219 lb, Minimum Edge Distance = 2", Minimum Spacing = 1", Minimum End Distance = 2.65", Minimum Embedment = 1 1/2", Minimum Concrete Compression Strength, f'c = 2,500-psi, Load combination 1.2D+1.6L with D = 0.3, L = 0.7 and α = 1.48.

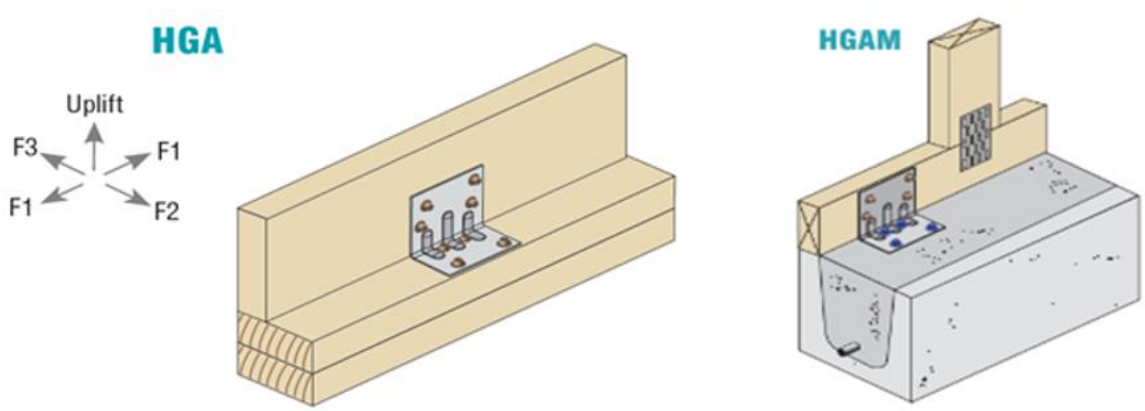

Figure 54. HGAM Load Directions for Wood and Masonry Applications

Information contained in this report was developed using report holder's confidential intellectual property (IP) and trade secrets (TS), which is protected by Defend Trade Secrets Act 2016, © DrJ Engineering, LLC

6.2.9 *Quick Connector PBA Post Base Anchor:*

6.2.9.1 The PBA Post Base Anchor dimensions, nails schedules, anchor schedules and allowable loads are provided in **Table 24**.

Table 24. PBA Post Base Anchor Allowable Loads

Species (Specific Gravity)	Part Number	Strap Dimensions (in)			Stand-Off Dimensions (in)			Nominal Post Size	Steel Thickness (gauge)		Fasteners				Allowable Loads[1,2,3,5] (lbs)	
		Width (W)	Length (L)	Height (H)	Width (W)	Length (L)	Height (H)		Strap	Stand-Off	Post		Anchor		Bearing	Uplift
											Qty	Size	Qty	Size	C_D=1.0	C_D=1.6
SP (0.55) or DF-L (0.50)	PBA44	3 9/16	3 1/2	5 1/2	3 1/2	3 5/16	1	4 x 4	12	12	12	16d	1	5/8	11,140	2,335
	PBA46	3 9/16	5	6	3 1/2	4 3/4	1	4 x 6	12	12	12	16d	1	5/8	13,000	2,335
	PBA66	5 1/2	5	6	5 7/16	4 3/4	1	6 x 6	12[(4)]	12	12	16d	1	5/8	16,485[4]	2,335[4]
	PBA77	7 1/8	7 1/16	7 1/4	7	6 7/8	1	7 x 7	12	12	14	16d	2	5/8	16,485	3,590
	PBA88	7 1/2	7 1/16	7 1/16	7 3/8	6 7/8	1	8 x 8	12	12	14	16d	2	5/8	27,065	3,590

SI: 1 in = 25.4 mm, 1 lb = 4.45 N

1. Refer to **Appendix A**. General Notes for Tables.
2. Allowable load values provided are for wet service condition, no further reduction required.
3. The square washer shall be installed below the heavy hex nut. The heavy hex nut shall be installed flush with the bottom of the standoff plate. See **Section 9** for installation instructions. See **Figure 55** for three-dimensional view of post base installed in concrete.
4. With 10-gauge strap, the allowable bearing and uplift loads (C_D = 1.6) are 16,485 lb and 2,545 lb, respectively.
5. For higher bearing loads, pack grout solid under 1" standoff plate prior to installation. Base bearing loads on column or concrete, according to the building code.

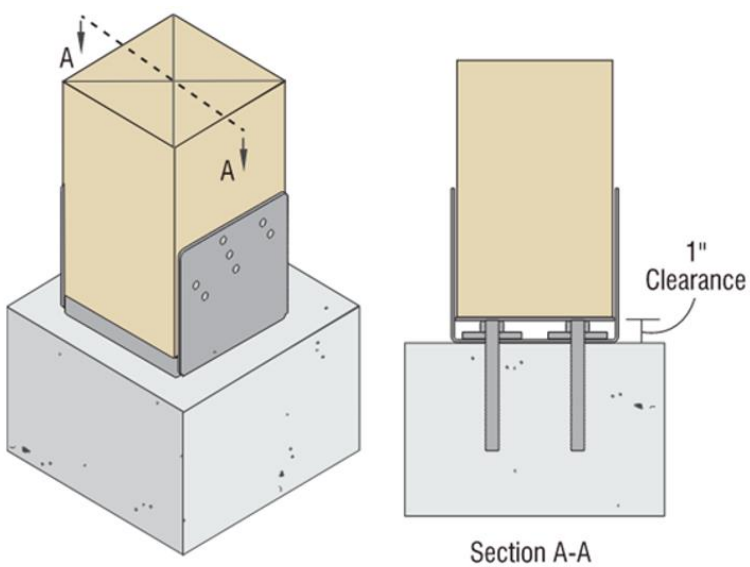

Figure 55. PBA Post Base Anchor (PBA77 and PBA88 Shown)

Information contained in this report was developed using report holder's confidential intellectual property (IP) and trade secrets (TS), which is protected by Defend Trade Secrets Act 2016, © DrJ Engineering, LLC

6.2.10 *PBA44-4P/6P and PBA66-4P/6P Porch Post Base Anchor:*

6.2.10.1 Allowable compressive design values for PBA44-4P/6P and PBA66-4P/6P are provided in **Table 25** and illustrations of an example of installation is shown in **Figure 56**.

Table 25. Gravity Design Values for PBA44-4P/6P and PBA66-4P/6P Porch Post Base Anchors[1,2,3,4]

Part Number	Strap Dimensions (in)				Steel Thickness (gauge)		Fasteners		SP/DF-L (lbs)			
									Prior to Concrete Pour		Embedded in Concrete	
	Width	Length	Height	Depth			Post		Bearing	Uplift	Bearing	Uplift
	W	L	H	D	Strap	Stand-Off	Qty	Size	1.0	1.6	1.0	1.6
PBA44-4P/6P	$3^5/_8$	$3^5/_8$	$5^7/_8$	4 and 6	12	12	12	10d	7,900	440	7,900	2,700
PBA66-4P/6P	$5^5/_8$	$5^5/_8$	$5^5/_8$	4 and 6	12	12	12	10d	12,775	440	12,775	2,700

SI: 1 in = 25.4 mm, 1 lb = 4.45 N

1. Refer to **Appendix A**. General Notes for Tables.
2. Use two (2) $^1/_4$" x $1^1/_2$" concrete screws to install prior to concrete pour. Minimum allowable pullout is 220 lb per screw with minimum edge and spacing of $2^1/_2$".
3. Allowable load values provided are for wet service condition, no further reduction required.
4. Minimum concrete compressive strength shall be 2,500-psi. Concrete design shall be performed by others.

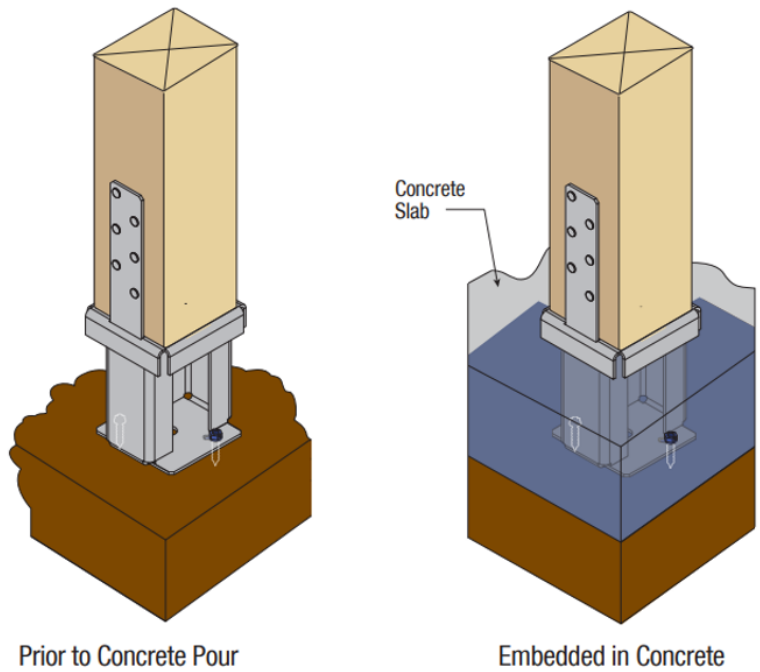

Figure 56. Installed Porch Post Base Anchor

Information contained in this report was developed using report holder's confidential intellectual property (IP) and trade secrets (TS), which is protected by Defend Trade Secrets Act 2016, © DrJ Engineering, LLC

6.2.11 *Quick Connector SPArtan Sill Plate Anchor:*

6.2.11.1 The SPArtan anchor allowable shear loads for concrete and wood are provided in **Table 26**. See **Figure 57** for load directions and an example of the SPArtan installation.

Table 26. SPArtan Anchor Allowable Shear and Tension Values (ASD) – Concrete and Wood

Applied Load	Allowable Loads[1,2,3,4,5,6] (lbs)	
	Load Direction	**Slab/Curb[7,8,9]**
Shear	Parallel (F_1)	1,395
	Perpendicular (F_2)	665
Tension	Uplift	1,155
	Uplift with Washer[10]	1,705

SI: 1 in = 25.4 mm, 1 lb = 4.45 N

1. Tabulated values are applicable to uncracked concrete and pressure treated Southern Pine #2 lumber.
2. Allowable load values are determined using a conversion factor (α_{ASD}) of 1.6. The conversion factor is based on the controlling load case: (0.9D + W) / (0.6D + 0.6W), where Dead Load (D) = 30% and Wind Load (W) = 70%. Adjustments shall be made where other load combinations control.
3. Anchor design conforms to ACI 318 with no supplementary reinforcement considered.
4. Anchor bending yield strength, F_{yb} = 100,000-psi and Concrete dowel bearing strength = 7,500-psi.
5. Allowable loads are provided for a 1.6 load duration (C_D). No further increases are permitted.
6. Allowable loads use a wet service factor C_M = 0.7 (MC > 19%).
7. Minimum edge distance = 2.25". Minimum end distance = 6". Minimum anchor spacing = 6.75". Minimum embedment = 6".
8. Minimum normal weight concrete, with a compressive strength of 2,500-psi.
9. Minimum curb width is 6".
10. Washer size is 2" x 2" x 1/8".

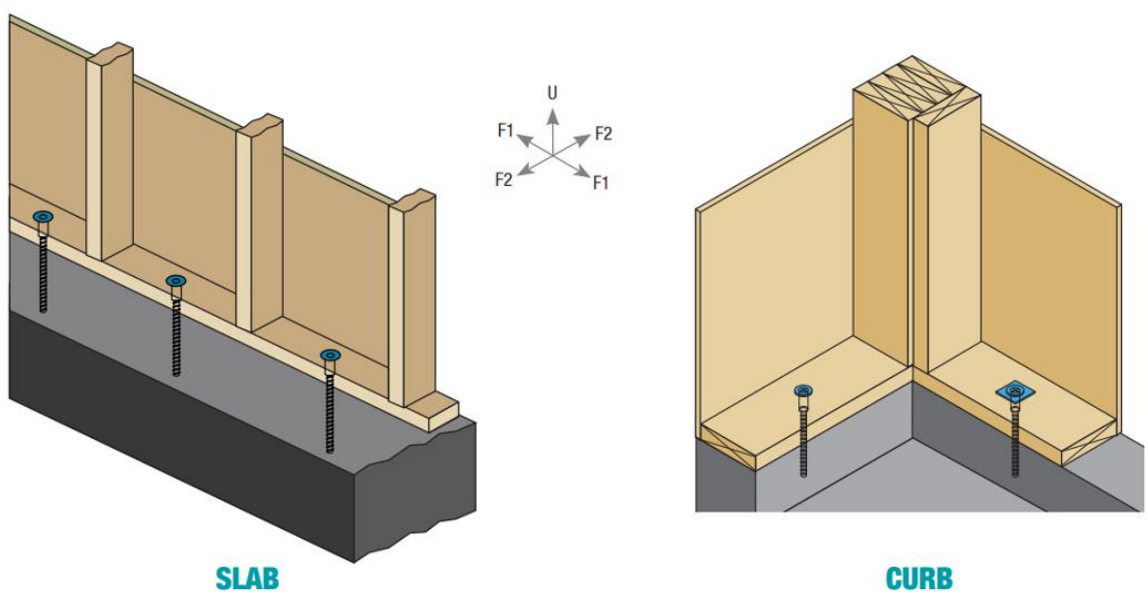

Figure 57. Sill Plate Anchor Load Directions and Installation in Slab/Curb

Information contained in this report was developed using report holder's confidential intellectual property (IP) and trade secrets (TS), which is protected by Defend Trade Secrets Act 2016, © DrJ Engineering, LLC

6.2.12 *Quick Connector Post Caps (PCM) and End Post Caps (EPCM):*

6.2.12.1 The PCM and EPCM dimensions, nails schedules and allowable loads are provided in **Table 27**.

Table 27. PCM and EPCM Allowable Loads[1]

Part Name	Part Number	Member Size		Post Cap Dimensions (in)					Fasteners[2]				Allowable Load[3,4,5] (lbs)					
									Beam		Post		SP (0.55)			DF-L (0.50)		
		Beam	Post	W1	W2	H1	L1	L2	Qty	Size	Qty	Size	Uplift	F1	F2	Uplift	F1	F2
12-gauge Post Cap	PCM44	4x	4x	$3\frac{9}{16}$	$3\frac{9}{16}$	$3\frac{9}{16}$	$2\frac{7}{16}$	11	12	16d	8	16d	2,120	2,050	1,955	2,085	1,855	1,795
	PCM46		6x		$5\frac{9}{16}$			13										
	PCM48		8x		$7\frac{9}{16}$			15										
	PCM64	6x	4x	$5\frac{1}{2}$	$3\frac{9}{16}$	$3\frac{1}{2}$	$3\frac{13}{16}$	11										
	PCM66		6x		$5\frac{9}{16}$			13										
	PCM68		8x		$7\frac{9}{16}$			15										
12-gauge Post Cap	PCM77	$7\frac{1}{8}$	$7\frac{1}{8}$	$7\frac{1}{8}$	$7\frac{1}{8}$	$3\frac{11}{16}$	$5\frac{5}{8}$	$14\frac{9}{16}$	12	16d	8	16d	2,120	2,050	1,955	2,085	1,855	1,795
	PCM84	8x	4x	$7\frac{1}{2}$	$3\frac{9}{16}$	$3\frac{1}{2}$	$5\frac{5}{8}$	11										
	PCM86		6x		$5\frac{9}{16}$	$3\frac{3}{8}$		13										
	PCM88		8x		$7\frac{9}{16}$	$3\frac{1}{2}$		15										
16-gauge Post Cap	PCM44-16	4x	4x	$3\frac{9}{16}$	$3\frac{9}{16}$	$3\frac{9}{16}$	$2\frac{7}{16}$	11	12	16d	8	16d	1,875	1,815	1,730	1,845	1,640	1,590
	PCM46-16		6x		$5\frac{9}{16}$			13										
	PCM48-16		8x		$7\frac{9}{16}$			15										
	PCM64-16	6x	4x	$5\frac{1}{2}$	$3\frac{9}{16}$	$3\frac{1}{2}$	$3\frac{13}{16}$	11										
	PCM66-16		6x		$5\frac{9}{16}$			13										
	PCM68-16		8x		$7\frac{9}{16}$			15										
	PCM84-16	8x	4x	$7\frac{1}{2}$	$3\frac{9}{16}$	$3\frac{1}{2}$	$5\frac{5}{8}$	11										
	PCM86-16	4x	6x	$3\frac{9}{16}$	$5\frac{9}{16}$	$3\frac{3}{8}$	$2\frac{7}{16}$	13										
	PCM88-16		8x		$7\frac{9}{16}$	$3\frac{1}{2}$		15										
	PCM44-16		4x		$3\frac{9}{16}$	$3\frac{9}{16}$		11										
12-gauge End Post Cap	EPCM44	4x	4x	$3\frac{9}{16}$	$3\frac{9}{16}$	$3\frac{9}{16}$	$2\frac{7}{16}$	$7\frac{1}{4}$	8	16d	8	16d	2,120	2,050	1,955	2,085	1,855	1,795
	EPCM46		6x		$5\frac{9}{16}$			$9\frac{1}{4}$										
	EPCM48		8x		$7\frac{9}{16}$			$11\frac{1}{4}$										
	EPCM64	6x	4x	$5\frac{1}{2}$	$3\frac{9}{16}$	$3\frac{1}{2}$	$3\frac{13}{16}$	$7\frac{1}{4}$										
	EPCM66		6x		$5\frac{9}{16}$			$9\frac{1}{4}$										
	EPCM68		8x		$7\frac{9}{16}$			$11\frac{1}{4}$										
	EPCM77	$7\frac{1}{8}$	$7\frac{1}{8}$	$7\frac{1}{8}$	$7\frac{1}{8}$	$3\frac{11}{16}$	$5\frac{5}{8}$	$10\frac{13}{16}$										
	EPCM84	8x	4x	$7\frac{1}{2}$	$3\frac{9}{16}$	$3\frac{1}{2}$	$5\frac{5}{8}$	$7\frac{1}{4}$										
	EPCM86		6x		$5\frac{9}{16}$	$3\frac{3}{8}$		$9\frac{1}{4}$										
	EPCM88		8x		$7\frac{9}{16}$	$3\frac{1}{2}$		$11\frac{1}{4}$										

Information contained in this report was developed using report holder's confidential intellectual property (IP) and trade secrets (TS), which is protected by Defend Trade Secrets Act 2016, © DrJ Engineering, LLC

Table 27. PCM and EPCM Allowable Loads[1]

Part Name	Part Number	Member Size		Post Cap Dimensions (in)					Fasteners[2]				Allowable Load[3,4,5] (lbs)					
									Beam		Post		SP (0.55)			DF-L (0.50)		
		Beam	Post	W1	W2	H1	L1	L2	Qty	Size	Qty	Size	Uplift	F1	F2	Uplift	F1	F2
16-gauge End Post Cap	EPCM44-16	4x	4x	$3^{9}/_{16}$	$3^{9}/_{16}$	$3^{9}/_{16}$	$2^{7}/_{16}$	$7^{1}/_{4}$	8	16d	8	16d	1,875	1,815	1,730	1,845	1,640	1,590
	EPCM46-16		6x		$5^{9}/_{16}$			$9^{1}/_{4}$										
	EPCM48-16		8x		$7^{9}/_{16}$			$11^{1}/_{4}$										
	EPCM64-16	6x	4x	$5^{1}/_{2}$	$3^{9}/_{16}$	$3^{1}/_{2}$	$3^{13}/_{16}$	$7^{1}/_{4}$										
16-gauge End Post Cap	EPCM66-16	6x	6x	$5^{1}/_{2}$	$5^{9}/_{16}$	$3^{1}/_{2}$	$3^{13}/_{16}$	$9^{1}/_{4}$	8	16d	8	16d	1,875	1,815	1,730	1,845	1,640	1,590
	EPCM68-16		8x		$7^{9}/_{16}$			$11^{1}/_{4}$										
	EPCM84-16	8x	4x	$7^{1}/_{2}$	$3^{9}/_{16}$	$3^{1}/_{2}$	$5^{5}/_{8}$	$7^{1}/_{4}$										
	EPCM86-16		6x		$5^{9}/_{16}$	$3^{3}/_{8}$		$9^{1}/_{4}$										
	EPCM88-16		8x		$7^{9}/_{16}$	$3^{1}/_{2}$		$11^{1}/_{4}$										

SI: 1 in = 25.4 mm, 1 lb = 4.45 N

1. Refer to **Appendix A**. General Notes for Tables.
2. Nails designated as 16d shall be 16d common nails (0.162" x 3.5", F_{yb} = 90,000-psi).
3. Allowable load values provided are for wet service condition and for a load duration factor (C_D) of 1.60, no further reduction required.
4. Loading in the F1 direction indicates shear forces parallel to the beam (**Figure 58**).
5. Loading in the F2 direction indicates shear forces perpendicular to the beam (**Figure 58**).

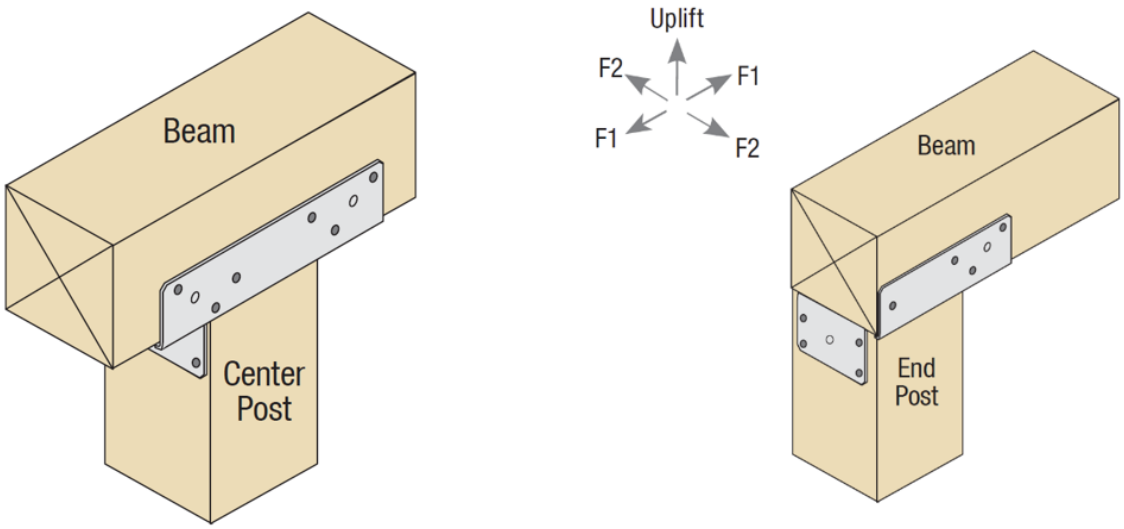

Figure 58. PCM and EPCM Load Directions (Uplift, F1, and F2)

Information contained in this report was developed using report holder's confidential intellectual property (IP) and trade secrets (TS), which is protected by Defend Trade Secrets Act 2016, © DrJ Engineering, LLC

6.2.13 *Quick Connector QuickTie Girder Connector (QGC):*

6.2.13.1 Allowable uplift and lateral loads, and fastener schedules for the QGC are provided in **Table 28**.

Table 28. QGC Allowable Loads[1]

Species (Specific Gravity)	Fasteners				Allowable Load[2,3] (lbs)					
	Rafter/Truss		Top Plates		Uplift		Lateral – F1		Lateral – F2	
					Load Duration Factor, C_D					
	Type[4,5,6]	Quantity	Type[7,8,9]	Quantity	1.0	1.6	1.0	1.6	1.0	1.6
SP (0.55)	1/4" x 3" (wood screw)	16[10]	QTO	1	4,350	4,455	1,665	2,040	935	935
			5/8" TR			5,445	770	1,235	480	770
DF-L (0.50)			QTO		4,015	4,455	1,630	1,910	885	885
			5/8" TR			5,085	740	1,185	440	705
SPF (0.42)			QTO		3,465	4,390	1,370	1,570	765	765
			5/8" TR			4,455	685	1,090	345	550
SP (0.55)		32[11]	QTO or 5/8" TR	2	8,715	8,715	-			
DF-L (0.50)					8,450	8,450				
SPF (0.42)					7,295	7,295				

SI: 1 in = 25.4 mm, 1 lb = 4.45 N

1. Refer to **Appendix A**. General Notes for Tables.
2. Loading in the F1 direction indicates shear forces parallel to the plane of the wall, connection to truss/rafter in withdrawal (see **Figure 59**).
3. Loading in the F2 direction indicates shear forces perpendicular to the plane of the wall, connection to truss/rafter in shear (see **Figure 59**).
4. Minimum specified screw requirements: Major diameter = 0.24", Minor (root) diameter = 0.185", Thread length (including tip) = 2.25" and Bending yield strength = 180,000-psi
5. Minimum reference lateral design value for wood screws, Z = 272 lb (SP), 251 lb (DF-L) and 217 lb (SPF)
6. Minimum reference withdrawal value for wood screws, W = 168 lb (SP), 132 lb (DF-L) and 86 lb (SPF)
7. The minimum allowable tensile strength of QTO (5/16" QuickTie Orange Cable) is 4,455 lbs and threaded rod is 5,445 lbs.
8. QTO cable shall be installed per QuickTie installation instructions. 5/8" threaded rod and nut at top shall be finger tight at a minimum.
9. QTO cable or threaded rod shall be installed before connecting QGC to truss/rafter.
10. Tabulated values are applicable to a single sided connection, as shown in **Figure 59**.
11. Tabulated values are applicable to a double-sided connection, as shown in **Figure 60**. Tabulated values are for uplift only and require two (2) 2 x 6 members as truss or header to achieve tabulated values.

Information contained in this report was developed using report holder's confidential intellectual property (IP) and trade secrets (TS), which is protected by Defend Trade Secrets Act 2016, © DrJ Engineering, LLC

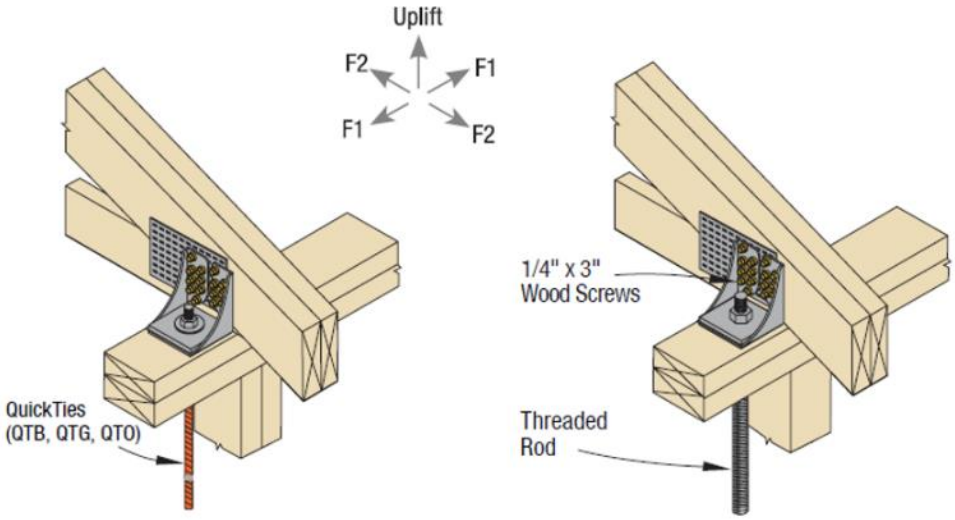

Figure 59. QGC Load Directions (Uplift, F1, and F2)

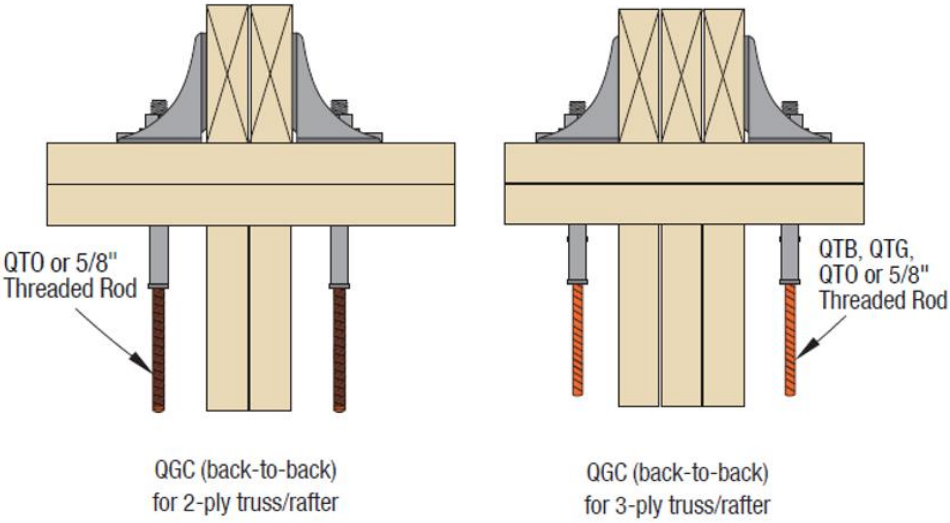

Figure 60. QGC Double Sided Connection

Information contained in this report was developed using report holder's confidential intellectual property (IP) and trade secrets (TS), which is protected by Defend Trade Secrets Act 2016, © DrJ Engineering, LLC

6.2.14 *Quick Connector Light Tension Tie (LTT):*

6.2.14.1 Allowable uplift loads and fastener schedules for the LTT20 are provided in **Table 29**. The LTT20 in the installed condition is shown in **Figure 61**.

Table 29. LTT20 Allowable Loads

Species (Specific Gravity)	Fasteners				Allowable Load[1,2,3] (lbs)	
	Nail		Anchor Bolt[4,5]		Uplift	
	Type	Quantity	Type	Quantity	1.0	1.6
SP (0.55)	10d x 1 1/2" (0.148 x 1.5")	10	3/4" diameter	1	1,515	1,680
DF-L (0.50)					1,405	1,575
SPF (0.42)					1,220	1,375

SI: 1 in = 25.4 mm, 1 lb = 4.45 N

1. Refer to **Appendix A**. General Notes for Tables.
2. Allowable loads based on connector attached to 2 x 4 member from 1" above the base (i.e., no resistance from prying action).
3. Total deflection of connector assembly at allowable loads are 0.194" (SP), 0.186" (DF-L), and 0.172" (SPF).
4. Anchor bolt installation into any substrates should be designed to resist the allowable uplift loads.
5. Washer size is 2 1/4" x 2" x 3/16" with a 13/16" diameter hole.

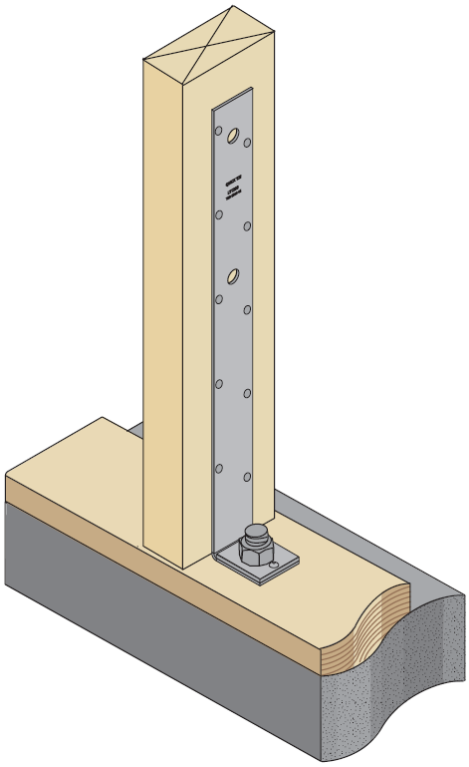

Figure 61. Installed LTT20

Information contained in this report was developed using report holder's confidential intellectual property (IP) and trade secrets (TS), which is protected by Defend Trade Secrets Act 2016, © DrJ Engineering, LLC

6.2.15 *Quick Connector HDTT45 and HDTT6 Hold-Down:*

6.2.15.1 Allowable uplift loads and fastener schedules for HDT45 and HDTT6 are provided in **Table 30**. The HDTT45 and HDTT6 in the installed condition are shown in **Figure 62**.

Table 30. HDTT45 and HDTT6 Allowable Loads

Part Number	Fasteners				Allowable Load[1,2] (lbs)		Displacement at Allowable Load (in)
	Nail		Rod[3]		SP/DF-L	HF/SPF	
	Type	Quantity	Type	Quantity	1.6	1.6	Δ_{all}
HDTT45	16d x 2$^1/_2$" (0.162" x 2.5")	26	$^5/_8$" diameter	1	6,155	5,650	0.082
HDTT6					5,480	4,895	0.145

SI: 1 in = 25.4 mm, 1 lb = 4.45 N

1. Refer to **Appendix A**. General Notes for Tables.
2. Minimum wood member size is 3" x 3.5" (2 x 4, 2-ply)
3. The nut on the $^5/_8$" anchor shall be installed finger tight plus approximately two turns to achieve the tabulated loads.

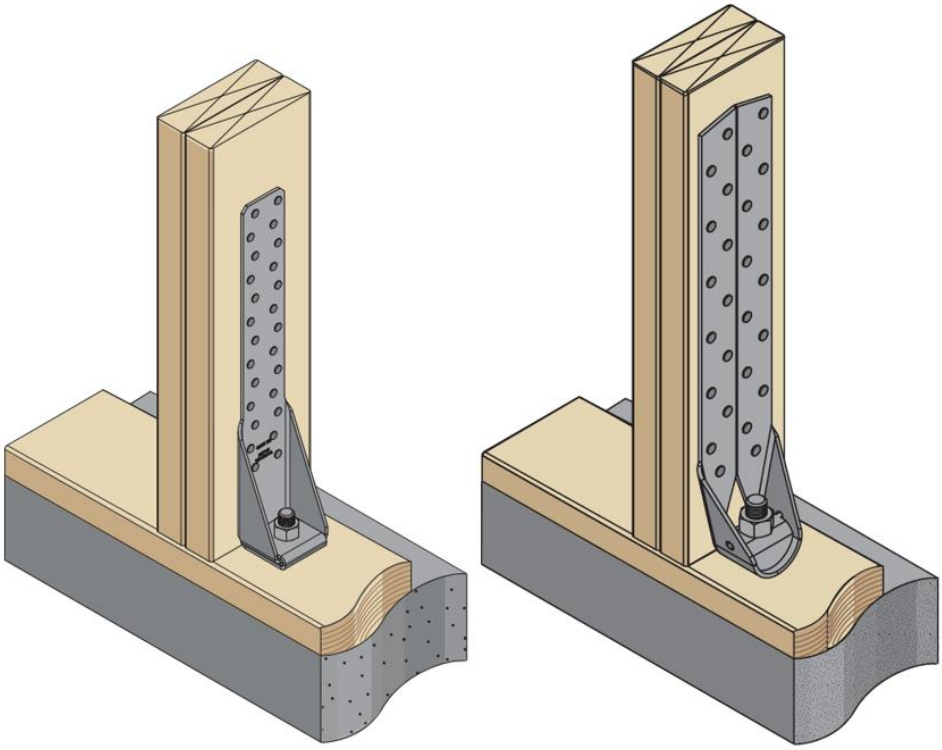

Figure 62. Installed HDTT45 (Left) and HDTT6 (Right)

Information contained in this report was developed using report holder's confidential intellectual property (IP) and trade secrets (TS), which is protected by Defend Trade Secrets Act 2016, © DrJ Engineering, LLC

6.2.16 *Quick Connectors HDTT, HDTT3, HD5, HD7, HD11, HD14, HD15/20, and HD22 Hold-Downs:*

6.2.16.1 Allowable uplift loads for Hold-Down Connectors are provided in **Table 31**. See **Figure 63** for installation illustration examples.

Table 31. Hold Down Allowable Loads[1,2,3]

Part Number	Steel Gauge	Species	Minimum Wood Size[3] (in)	Dimensions (in)				Fasteners				Uplift (lbs)		
								Screw/Bolt		Anchor Bolt[2]		Load Duration Factor, C_D		
				Height H	Width W	Depth D	Stud Face to Anchor CL	Type	Qty	Size	Qty	1.0	1.6	Δ (1.6)
HDTT	14-gauge	SP (0.55)	1.5 x 3.5	6 7/8	3 1/4	1 3/4	1	SWH15	8	1/2"	1	1,715	2,300	0.190
		DF-L (0.50)										1,455	2,055	0.149
		HF/SPF (0.42)										1,080	1,525	0.088
HDTT3	12-gauge	SP (0.55)	3 x 3.5	6 7/8	3 1/4	1 3/4	1	SWH3	8	1/2"	1	2,170	3,475	0.074
		DF-L (0.50)										2,005	3,210	0.067
		HF/SPF (0.42)										1,730	2,770	0.055
HD5	14-gauge	SP (0.55)	3 x 3.5	8 3/4	3	3	1 3/8	SWH3	10	5/8"	1	5,240	5,885	0.197
		DF-L (0.50)										5,240	5,445	0.181
		HF/SPF (0.42)										2,105	3,365	0.089
HD7	12-gauge	SP (0.55)	3 x 3.5	10 3/4	3	3	1 3/8	SWH3	14	7/8"	1	6,750	7,280	0.102
		DF-L (0.50)										6,750	6,980	0.098
		HF/SPF (0.42)										3,025	4,845	0.069
HD8	12-gauge	SP (0.55)	3 x 5.5	12 3/4	3	3	1 3/8	SWH3	18	7/8"	1	8,390	8,390	0.065
		DF-L (0.50)										7,755	7,755	0.058
		HF/SPF (0.42)										3,955	6,325	0.043

Information contained in this report was developed using report holder's confidential intellectual property (IP) and trade secrets (TS), which is protected by Defend Trade Secrets Act 2016, © DrJ Engineering, LLC

Table 31. Hold Down Allowable Loads[1,2,3]

Part Number	Steel Gauge	Species	Minimum Wood Size[3] (in)	Dimensions (in)				Fasteners				Uplift (lbs)		
								Screw/Bolt		Anchor Bolt[2]		Load Duration Factor, C_D		
				Height H	Width W	Depth D	Stud Face to Anchor CL	Type	Qty	Size	Qty	1.0	1.6	Δ (1.6)
HD11	12-gauge	SP (0.55)	3 x 3.5	15 3/4	3	3	1 3/8	SWH3	24	7/8"	1	12,120	12,755	0.139
		DF-L (0.50)										12,120	12,755	0.139
		HF/SPF (0.42)										5,195	8,310	0.085
HD14[4]	7-gauge	SP (0.55)	3.5 x 5.5	18 3/4	3	3 1/2	1 1/2	SWH3	30	1"	1	10,500	14,120	0.095
		DF-L (0.50)										10,500	14,060	0.095
		HF/SPF (0.42)										6,980	11,170	0.075
HD 15/20[5,6]	3-gauge	SP (0.55)	3 x 7.25	25	3 1/4	3 1/2	2 1/8	1"	5	1 1/4"	1	10,740	15,895	0.102
		DF-L (0.50)										9,847	15,635	0.100
		HF/SPF (0.42)										8,410	13,460	0.082
HD 15/20[5,6]	3-gauge	SP (0.55)	5.5 x 5.5	25	3 1/4	3 1/2	2 1/8	1"	5	1 1/4"	1	14,845	20,065	0.087
		DF-L (0.50)										14,220	20,065	0.087
		HF/SPF (0.42)										13,125	19,695	0.086
HD22[5]	7-gauge	SP (0.55)	5.5 x 5.5	24 1/2	3 1/8	3 7/8	2	SWH3	36	1 1/4"	1	15,660	22,245	0.087
		DF-L (0.50)										15,660	20,115	0.078
		HF/SPF (0.42)										15,225	19,205	0.068

Information contained in this report was developed using report holder's confidential intellectual property (IP) and trade secrets (TS), which is protected by Defend Trade Secrets Act 2016, © DrJ Engineering, LLC

Table 31. Hold Down Allowable Loads[1,2,3]

Part Number	Steel Gauge	Species	Minimum Wood Size[3] (in)	Dimensions (in)				Fasteners				Uplift (lbs)		
								Screw/Bolt		Anchor Bolt[2]		Load Duration Factor, C_D		
				Height H	Width W	Depth D	Stud Face to Anchor CL	Type	Qty	Size	Qty	1.0	1.6	Δ (1.6)

SI: 1 in = 25.4 mm, 1 lb = 4.45 N

1. Refer to **Appendix A**. General Notes for Tables.
2. Anchor bolt installation into any substrates should be designed to resist the allowable uplift loads.
3. Hold-downs shall be installed into the wide face of the wood member in order to achieve the tabulated allowable load values.
4. Bend washer ($^3/_8$") welded to bend strap around perimeter with 1" offset from the base.
5. Bend washer ($^3/_8$") welded to bend strap around perimeter with $3^1/_2$" offset from the base.
6. Minimum bolt requirements: bending yield strength = 45,000-psi and dowel bearing strength, F_{es} = 87,000-psi.

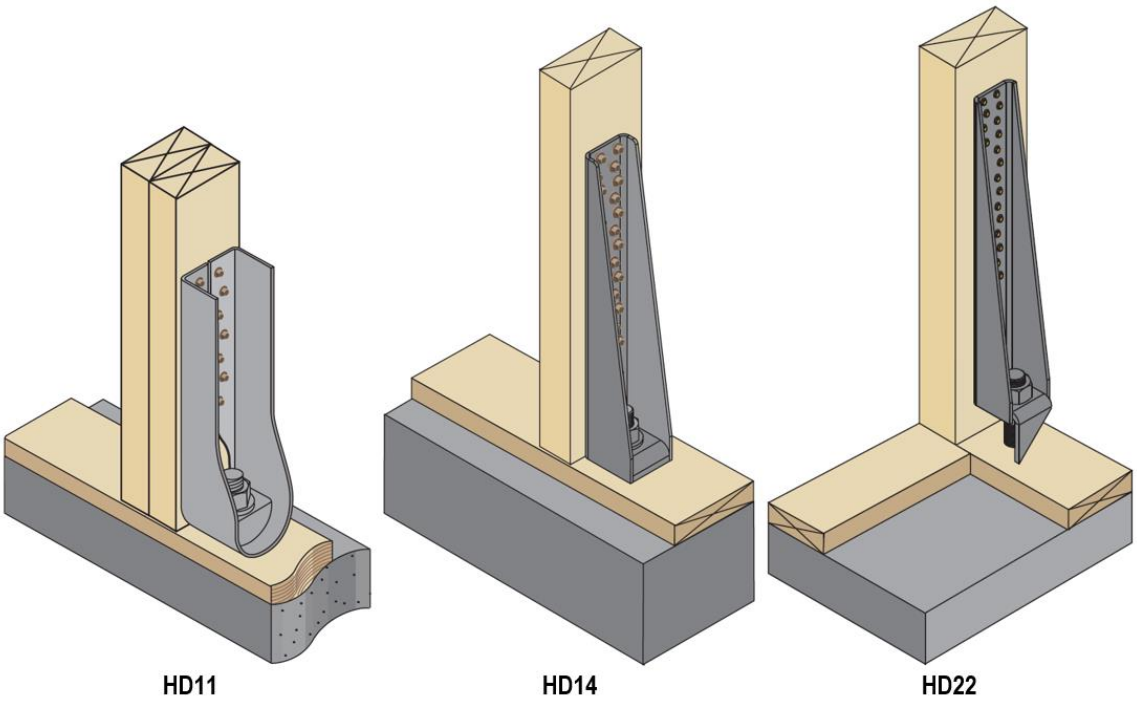

Figure 63. Installed HD11, HD14, and HD22

Information contained in this report was developed using report holder's confidential intellectual property (IP) and trade secrets (TS), which is protected by Defend Trade Secrets Act 2016, © DrJ Engineering, LLC

6.2.17 *Quick Connector QuickTie Girder Connectors as a Hold-Down (QGCW):*

6.2.17.1 Allowable uplift loads and fastener schedules for the QGCW are provided in **Table 32**. See **Figure 64** for installation illustration examples.

Table 32. QGCW Allowable Loads[1]

Species (Specific Gravity)	Fasteners				Minimum Stud/Joist Size and Quantity Required		Allowable Load[7,8] (lbs)
	Stud/Joist		Anchor Bolt				Uplift
	Type[2,3]	Quantity	Type[4,5,6]	Quantity	Size	Quantity	1.6
SP (0.55)	1/4" x 3" (wood screw)	16	5/8" TR	1	2 x 4	2	4,300
DF-L (0.50)							4,295
SPF (0.42)							3,705

SI: 1 in = 25.4 mm, 1 lb = 4.45 N

1. Refer to **Appendix A**. General Notes for Tables.
2. Minimum specified screw requirements: Major diameter = 0.24", Minor (root) diameter = 0.185", Thread length (including tip) = 2.25" and Bending yield strength = 180,000-psi
3. Minimum reference lateral design value for wood screws, Z = 272 lb (SP), 251 lb (DF-L) and 217 lb (SPF)
4. Anchor bolt installation into any substrates should be designed to resist the allowable uplift loads. The minimum allowable tensile strength of threaded rod shall meet or exceed the allowable loads listed above.
5. 5/8" threaded rod and nut at top shall be finger tight at a minimum.
6. Threaded rod shall be installed before connecting QGCW to stud/joist. The QGCW shall be installed with at least 3" edge distance to the bottom of the stud.
7. Tabulated values are applicable to a hold down connection, as shown in **Figure 64**.
8. Deflection measured at allowable load: 0.228 (SP), 0.227 (DF-L) and 0.188 (HF/SPF).

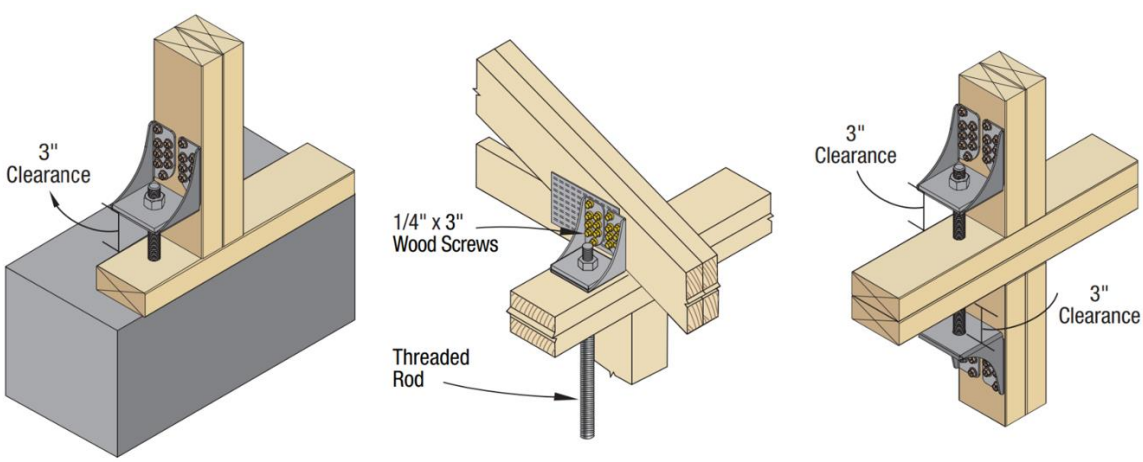

Figure 64. Installed QGCWs

Information contained in this report was developed using report holder's confidential intellectual property (IP) and trade secrets (TS), which is protected by Defend Trade Secrets Act 2016, © DrJ Engineering, LLC

6.2.18 *METAS and HETAS Embedded Truss Anchor Straps:*

6.2.18.1 Allowable loads for embedded anchors are provided in **Table 33**. See **Figure 65** for installation illustration examples.

Table 33. METAS and HETAS Allowable Loads[1]

Part		Fasteners		Allowable Loads (lbs) - Southern Pine (C_D = 1.6)[2,3,4,5,6,7,8,9]											
				Single Anchor						Double Anchor					
Number	Length (in.)	Type	Qty	CMU			Concrete			CMU			Concrete		
				Uplift	F1	F2	Uplift	F1	F2	Uplift	F1	F2	Uplift	F1	F2
METAS12	12	10d x 1 1/2 (0.148 x 1.50")	7	1,445	340	760	1,445	340	760	2,890	1,335	1,140	2,890	1,335	1,140
METAS16	16		9	1,600	440	760	1,600	440	760	3,195	1,375	1,140	3,195	1,375	1,140
METAS18	18														
METAS20	20														
METAS24	24														
METAS40	40														
HETAS12	12	10d x 1 1/2 (0.148 x 1.50")	7	1,475	340	760	1,475	340	760	2,950	1,335	1,140	2,950	1,335	1,375
HETAS16	16		9	1,895	440	760	1,895	440	760	3,324	1,375	1,140	3,175	1,405	1,375
HETAS20	20														
HETAS24	24														
HETAS40	40														

SI: 1 in = 25.4 mm, 1 lb = 4.45 N

1. Refer to **Appendix A**. General Notes for Tables.
2. Allowable loads are provided for load duration factor (C_D) of 1.6. No further increase is permitted.
3. Minimum specified compressive strength of grout is 2,000-psi.
4. Minimum specified compressive strength of concrete is 2,500-psi.
5. Loading in the F1 direction indicates shear forces parallel to the plane of the concrete/CMU wall.
6. Loading in the F2 direction indicates shear forces perpendicular to the plane of the concrete/CMU wall.
7. Minimum edge distance for CMU installation is 2".
8. Minimum edge distance for concrete installation is 1.5".
9. See **Figure 65** for installation example.

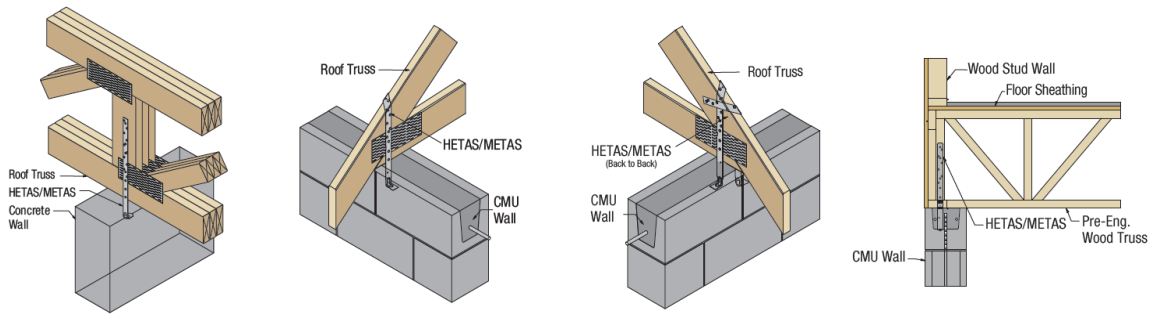

Figure 65. Installed METAS/HETAS Embedded Anchors

Information contained in this report was developed using report holder's confidential intellectual property (IP) and trade secrets (TS), which is protected by Defend Trade Secrets Act 2016, © DrJ Engineering, LLC

6.2.19 *PCS and PCES Post Cap Connectors:*

6.2.19.1 Dimensions for PCS and PCES connectors are provided in **Table 34** and **Figure 66**.

6.2.19.2 Allowable uplift and lateral loads for PCS and PCES connecters are provided in **Table 35**.

Table 34. PCS and PCES Dimensions

Part Number	Steel Thickness	Dimensions				
		Width	Length		Height	
			L1 (in.)	L2 (in.)	H1 (in.)	H2 (in.)
PCS44	18-gauge	$1^3/_8$	$3^9/_{16}$	$6^1/_4$	$2^5/_8$	$2^7/_8$
PCS44R		$1^1/_2$	4	7		
PCS66		$1^1/_4$	$5^1/_2$	8		
PCS66R		$1^1/_2$	6	9		
PCES44		$1^1/_2$	$3^1/_4$	$4^3/_4$	$2^3/_8$	$2^3/_4$
PCES66			$5^1/_2$	7		$2^1/_8$
SI: 1 in = 25.4 mm						

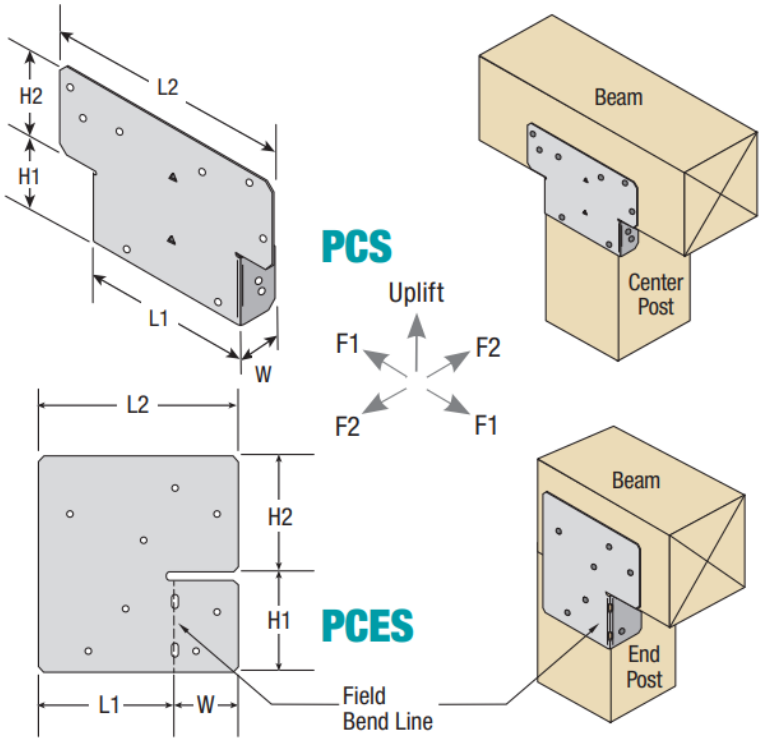

Figure 66. PCS and PCES Dimensions

Information contained in this report was developed using report holder's confidential intellectual property (IP) and trade secrets (TS), which is protected by Defend Trade Secrets Act 2016, © DrJ Engineering, LLC

Table 35. Uplift and Lateral Design Values for PCS and PCES Connectors

Part Number	Fasteners			Allowable Loads (lbs)[1,2,3,4]					
	Size	Quantity		SP		DF-L		HF/SPF	
		Beam	Post	Uplift	F1	Uplift	F1	Uplift	F1
PCS44	16d (0.162" x 3.5")	12	12	2,935	2,175	2,295	1,950	2,295	1,870
PCS44R									
PCS66									
PCS66R									
PCES44		12	12	1,955	1,500	1,800	1,220	1,550	1,090
PCES66		12	12	1,645	1,205	1,520	925	1,310	835

SI: 1 in = 25.4 mm, 1 lb = 4.45 N

1. Refer to **Appendix A**. General Notes for Tables.
2. Allowable loads and fastener size/quantity provided are for a pair of post caps.
3. Allowable loads are provided for a load duration factor (C_D) of 1.6. No further increase is permitted.
4. See **Figure 67** for installation example and load directions.

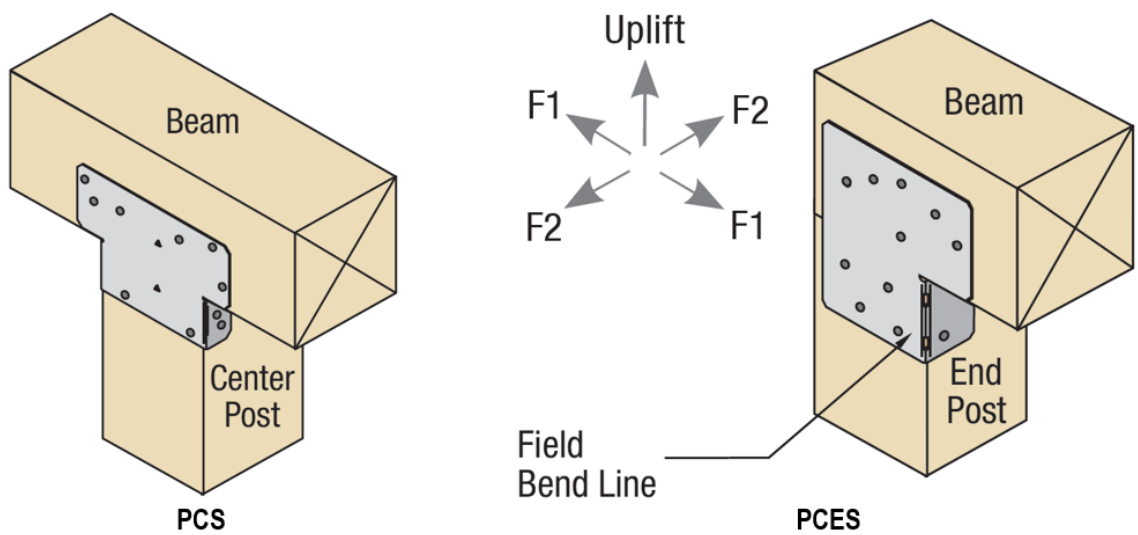

Figure 67. Installed PCS and PCES Connectors

Information contained in this report was developed using report holder's confidential intellectual property (IP) and trade secrets (TS), which is protected by Defend Trade Secrets Act 2016, © DrJ Engineering, LLC

6.2.20 *PHGT Girder Tie Downs:*

6.2.20.1 Allowable uplift and lateral design values for PHGT2, PHHGT3, and PHHGT4 connecters are provided in **Table 36**. An installation example is shown in **Figure 68**.

Table 36 . Uplift and Lateral Design Values for PHGT Connectors

Part Number	Fasteners				Allowable Loads (lbs)[1,2,3,4]								
	Rafter/Truss		Stud/Top Plate		SP			DF-L			HF/SPF		
	Type	Qty	Type	Qty	Uplift	F1	F2	Uplift	F1	F2	Uplift	F1	F2
PHGT2	10d Common	16	10d common	18	2,435	980	255	2,435	900	255	2,240	745	210
PHHGT3	SWH3	12	10d common	26	3,355	1,230	410	3,130	1,230	360	2,710	1,060	280
PHHGT4	SWH3	16	10d common	37	4,185	2,230	590	3,625	1,825	510	4,185	2,230	590

SI: 1 in = 25.4 mm, 1 lb = 4.45 N

1. Refer to **Appendix A**. General Notes for Tables.
2. Loading in the F1 direction indicates shear forces parallel to the plane of the wall, connection to truss/rafter in withdrawal (see **Figure 68**).
3. Loading in the F2 direction indicates shear forces perpendicular to the plane of the wall, connection to truss/rafter in shear (see **Figure 68**).
4. Allowable loads are provided for a load duration factor (C_D) of 1.6. No further increase is permitted.

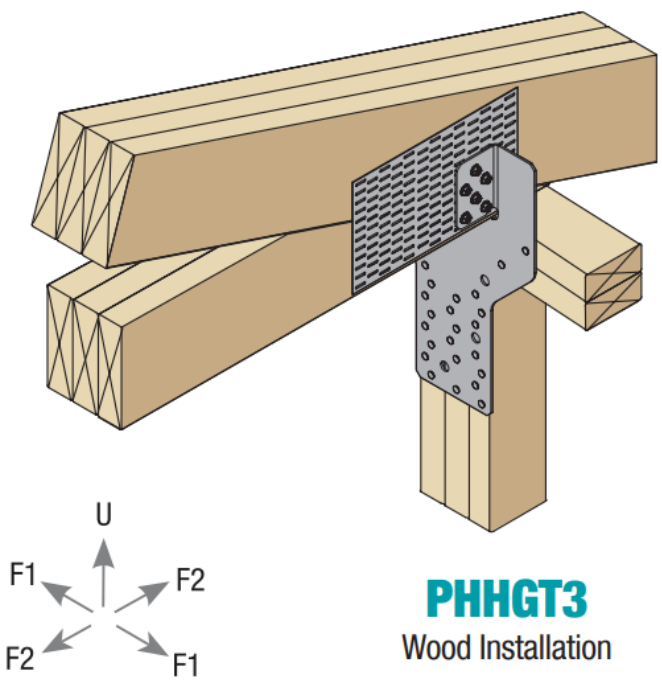

Figure 68. Installed PHHGT3 Connector

Information contained in this report was developed using report holder's confidential intellectual property (IP) and trade secrets (TS), which is protected by Defend Trade Secrets Act 2016, © DrJ Engineering, LLC

6.2.21 *TCC Tension-Compression Drag Strut Connectors:*

6.2.21.1 Allowable compression and tension design values for TCC16L/R and TCC21L/R connectors are provided in **Table 37**. See **Figure 69** for installation illustration examples.

Table 37. Compression and Tension Design Values for TCC Connectors

Part Number	Fasteners				Allowable Loads (lbs)[1,2]					
	Rafter/Truss		Stud/Top Plate		SP		DF-L		HF/SPF	
	Type	Qty	Type	Qty	Compression	Tension	Compression	Tension	Compression	Tension
TCC16L/R	SWH3	10	SWH3	10	2,600	3,890	2,410	3,605	2,095	3,130
TCC21L/R	SWH3	12	SWH3	12	4,370	5,780	4,370	5,500	3,920	4,720

SI: 1 in = 25.4 mm, 1 lb = 4.45 N

1. Refer to **Appendix A**. General Notes for Tables.
2. Allowable loads are provided for a load duration factor (C_D) of 1.6. No further increase is permitted.
3. See **Figure 69** for installation example and load directions.

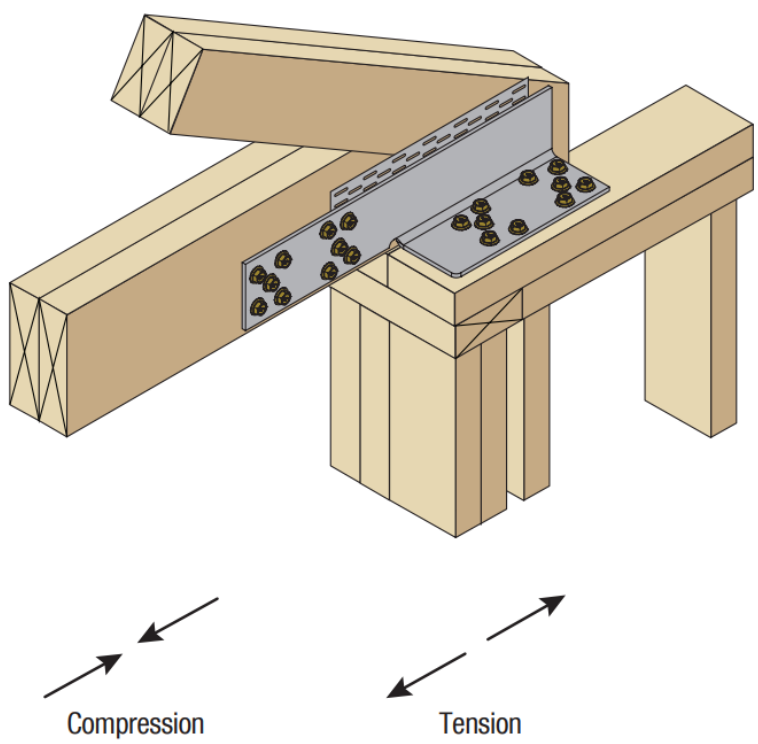

Figure 69. Installed TCC16 Connector

Information contained in this report was developed using report holder's confidential intellectual property (IP) and trade secrets (TS), which is protected by Defend Trade Secrets Act 2016, © DrJ Engineering, LLC

6.2.22 *PAS-Purlin Anchor Straps:*

6.2.22.1 Allowable compression and tension design values for PAS connectors are provided in **Table 38** and an illustration of an example of installation is shown in **Figure 70**.

Table 38. Tension Design Values for PAS Anchors

Part		Embedment Length, L_e (in.)		Stud Fasteners		Allowable Loads (lbs)[1,2]			
						SP/DF-L		HF/SPF	
Number	Length, L (in.)					Floor	Uplift	Floor	Roof
		Concrete[3]	CMU[4]	Type	Qty	1.0	1.6	1.0	1.6
PAS18-3Z	18 1/2	4	6	10d Common (0.148 x 3")	12	1,685	2,700	1,465	2,340
PAS23-3Z	23 3/4				16	2,250	3,600	1,950	3,120
PAS28-3Z	29				16	2,250	3,600	1,950	3,120
PAS35-3Z	35				16	2,250	3,600	1,950	3,120
PAS51-3Z	51				10	1,405	2,250	1,220	1,950

SI: 1 in = 25.4 mm, 1 lb = 4.45 N

1. Refer to **Appendix A**. General Notes for Tables.
2. Minimum wood member size is 3" x 3 1/2".
3. Minimum compressive strength of concrete is 3,000-psi.
4. Minimum compressive strength of grout-filled CMU is 2,000-psi.
5. Total deflection of connector assembly at highest allowable load is 0.031".

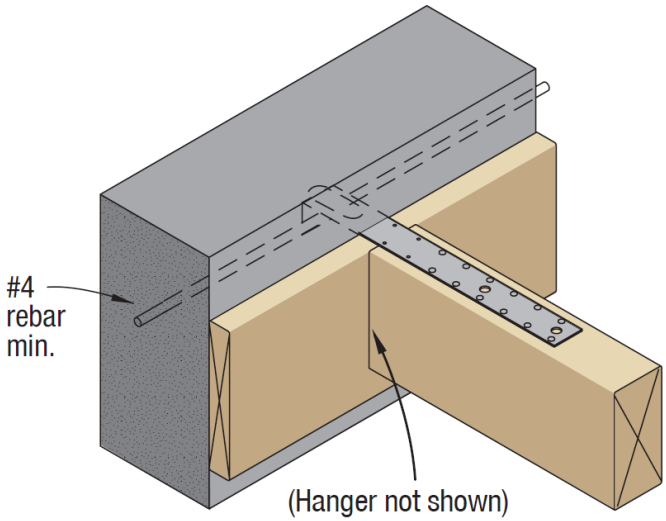

Purlin-to-Wall Attachment

Figure 70. Installed PAS Connector

Information contained in this report was developed using report holder's confidential intellectual property (IP) and trade secrets (TS), which is protected by Defend Trade Secrets Act 2016, © DrJ Engineering, LLC

6.2.23 *FSTHD and FSTHDJ Foundation Strap-Tie Hold-Downs:*

6.2.23.1 Allowable compression and tension design values for FSTHD and FSTHDJ connectors are provided in **Table 39** and illustrations of an example of installation is shown in **Figure 71**.

Table 39. Tension Design Values for FSTHD and FSTHDJ Strap-Tie Hold-Downs

Part Number	Embedment Length L_e (in.)	Steel Gauge	Stud Fasteners		Allowable Loads (lbs)[1,2,3,4,5]					
					SP		DF-L		HF/SPF	
					Corner[6]	Mid-Wall[7]	Corner[6]	Mid-Wall[7]	Corner[6]	Mid-Wall[7]
			Type	Qty	1.6	1.6	1.6	1.6	1.6	1.6
FSTHD8	8	14-gauge	10d x 3¼" (0.148 x 3.25")	20	2,755	3,455	2,755	3,195	2,755	2,760
FSTHD8J										
FSTHD10	10	12-gauge		28	3,750	5,800	3,750	5,370	3,750	4,660
FSTHD10J										
FSTHD14	14	12-gauge		30	6,615	6,615	6,230	6,230	5,405	5,405
FSTHD14J										

SI: 1 in = 25.4 mm, 1 lb = 4.45 N

1. Refer to **Appendix A**. General Notes for Tables.
2. Allowable loads are provided for a load duration factor (C_D) of 1.6. No further increase is permitted.
3. Total deflection of connector assembly at highest allowable load:
   a. FSTHD8 = 0.072"
   b. FSTHD10 = 0.068"
   c. FSTHD14 = 0.111"
4. Minimum wood member size is 3" x 3½".
5. Minimum compressive strength of concrete is 2,500-psi. Minimum of one (1) #4 rebar is required at 6" embedment and 3" edge distance.
6. For corner straps, minimum end distance is ½" and minimum center-to-center spacing is 3 times the embedment length.
7. For mid-wall straps, end distance is 1.5 times the embedment length.

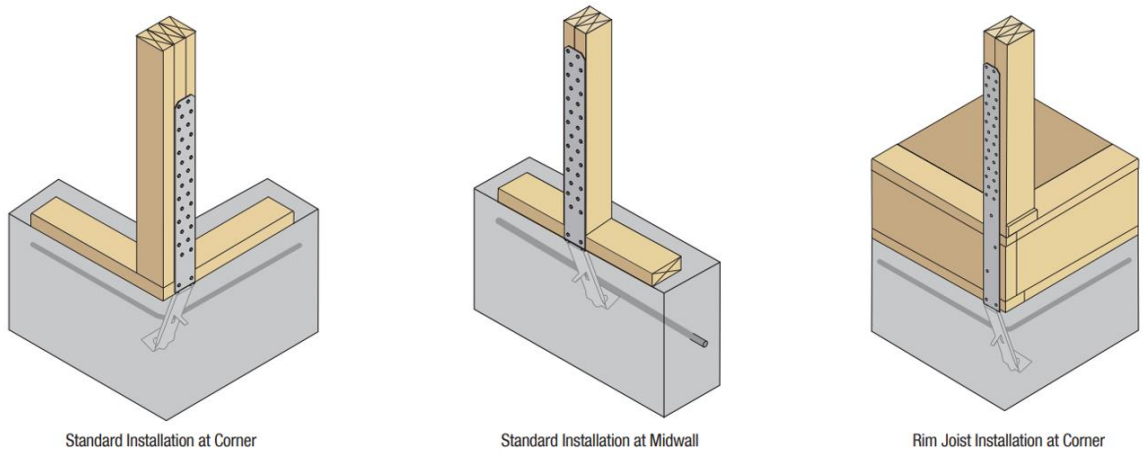

Figure 71. Installed FSTHD Connector (Left and Center) and FSTHDJ Connector (Right)

Information contained in this report was developed using report holder's confidential intellectual property (IP) and trade secrets (TS), which is protected by Defend Trade Secrets Act 2016, © DrJ Engineering, LLC

6.2.24 *TR1 and TR2 Roof Truss Clips:*

6.2.24.1 Allowable lateral design values for TR1 and TR2 Roof Truss Clips are provided in **Table 40** and illustrations of an example of installation is shown in **Figure 72**.

Table 40. Lateral Design Values for TR1 and TR2 Truss Clips

Part Number	Species	Steel Gauge	Dimensions (in)			Fasteners			Allowable Loads (lbs), C_D = 1.6					
			H	W	L	Type	Truss / Rafter Qty	Top Plate Qty	Gap = 0"		Gap = 1/4"		Gap = 1/2"	
									F1	F2	F1	F2	F1	F2
TR1	SP (0.55)	18-gauge	2 3/4	1 1/4	1 7/8	8d x 1 1/2" (0.131" x 1.5")	1	2	85	55	65	50	45	40
	DF-L (0.50)								85	55	65	50	45	40
	SPF (0.42)								80	50	60	45	40	40
TR2	SP (0.55)	18-gauge	2 3/4	2 1/2	1 7/8	8d x 1 1/2" (0.131" x 1.5")	2	4	155	195	115	195	80	185
	DF-L (0.50)								155	155	115	155	80	155
	SPF (0.42)								145	100	105	100	75	100

SI: 1 in = 25.4 mm, 1 lb = 4.45 N

8. Refer to **Appendix A**. General Notes for Tables.
9. Allowable loads are provided for a load duration factor (C_D) of 1.6. No further increase is permitted.
10. F1 loads are parallel to grain of wall top plates. F2 loads are perpendicular to wall top plates.
11. To achieve F1 loads, roof truss clips shall be installed on both sides of the truss.

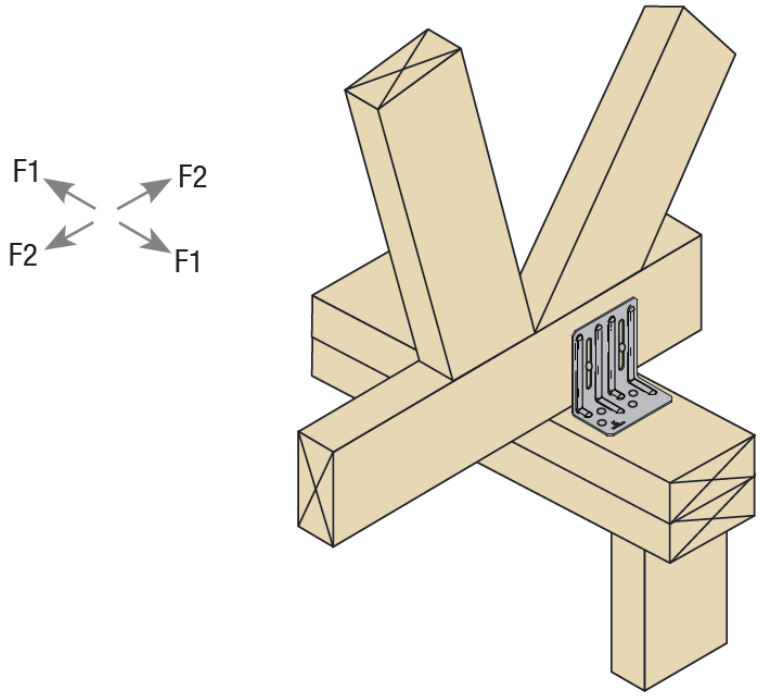

Figure 72. Installed TR2 Truss Clip

Information contained in this report was developed using report holder's confidential intellectual property (IP) and trade secrets (TS), which is protected by Defend Trade Secrets Act 2016, © DrJ Engineering, LLC

6.2.25 *FASA4 Foundation Anchor Strap:*

6.2.25.1 Allowable compression and tension design values for FASA4 Foundation Anchor Straps are provided in **Table 41** and illustrations of an example of installation is shown in **Figure 73**.

Table 41. FASA4 Allowable Tension and Shear Values (ASD) – Concrete and Wood[1]

Part Number	Installation Type[6]	Fasteners				Allowable Loads (lbs)[2,4,5]		
		Type	Sill Plate[3]		Stud	Uplift	F1 (Parallel to Wall)	F2 (Perpendicular to Wall)[7]
			Narrow Face	Wide Face				
Wind and Seismic Design Category (SDC) A-B								
FASA4	Standard	10d x 1½" (0.148 x 1.50")	3	6	-	1,310	1620	1,250
	One Leg Up		3	3	3	1,050	1,260	1,135
Seismic Design Category (SDC) C-F								
FASA4	Standard	10d x 1½" (0.148 x 1.50")	3	6	-	1,150	1360	1,190
	One Leg Up		3	3	3	920	1,100	1,135

SI: 1 in = 25.4 mm, 1 lb = 4.45 N

1. Refer to **Appendix A**. General Notes for Tables.
2. Allowable loads are provided for a load duration factor (C_D) of 1.6. No further increase is permitted.
3. Foundation plates or sills shall be pressure-preservative treated Southern Pine (PPT-SP) and shall comply with IBC Section 2304.3.1 and IRC Section R403.1.6.
4. Allowable loads are only applicable to uncracked concrete and are based on a minimum stem wall thickness of 6", minimum distance from the end of the concrete stem wall to the centerline of the FASA4 anchor of 4".
5. Minimum compressive strength of concrete is 2,500-psi.
6. Wood framing members (studs) with which the connectors are installed, *"One Leg Up"*, shall have a published specific gravity (SG) of 0.55. For species with a published lower than 0.55, reduce the allowable load by the following:
7. Specific Gravity Adjustment Factor = [1-(0.55-G)], where G is the specific gravity of the wood species used. Specific Gravity Adjustment Factor shall not be greater than 1.0.

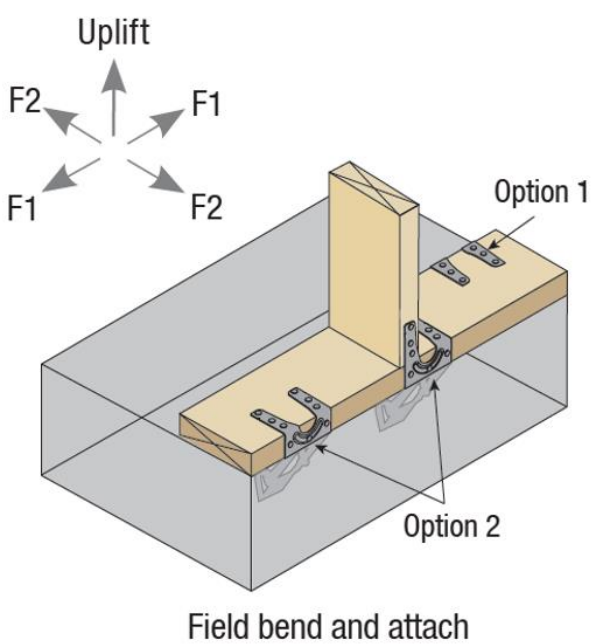

Figure 73. Installed FASA4 Foundation Anchors – Standard Installation

Information contained in this report was developed using report holder's confidential intellectual property (IP) and trade secrets (TS), which is protected by Defend Trade Secrets Act 2016, © DrJ Engineering, LLC

6.2.26 *TCS18-3Z and TCS20-3Z Tension-Compression Straps:*

6.2.26.1 Allowable compression and tension design values for TCS18-3Z and TCS20-3Z Tension Compression Straps are provided in **Table 42**. Illustrations of an example of installation is shown in **Figure 74**.

Table 42. TCS18-3Z and TCS20-3Z Tension-Compression Straps Allowable Compression and Tension Values

Part Number	Installed On	Number of Strap(s)	Fasteners per Strap		Allowable Loads (lbs)[1,2] (C_D = 1.6)			
					SP/DF-L		HF/SPF	
			Type	Qty	Compression	Tension	Compression	Tension
TCS18-3Z TCS20-3Z	One Side	1	10d x 1 1/2" (0.148 x 1.50")	24	1,270	2,465	1,100	2,130
		2			2,330	4,930	2,015	4,265
	Two Side	2 (total)			2,330	4,930	2,015	4,265
		3 (total)			3,600	7,390	3,115	6,395
		4 (total)			4,660	9,855	4,030	8,530

SI: 1 in = 25.4 mm, 1 lb = 4.45 N

1. Refer to **Appendix A**. General Notes for Tables.
2. Allowable loads are provided for a load duration factor (C_D) of 1.6. No further increase is permitted.
3. See **Figure 74** for installation examples.

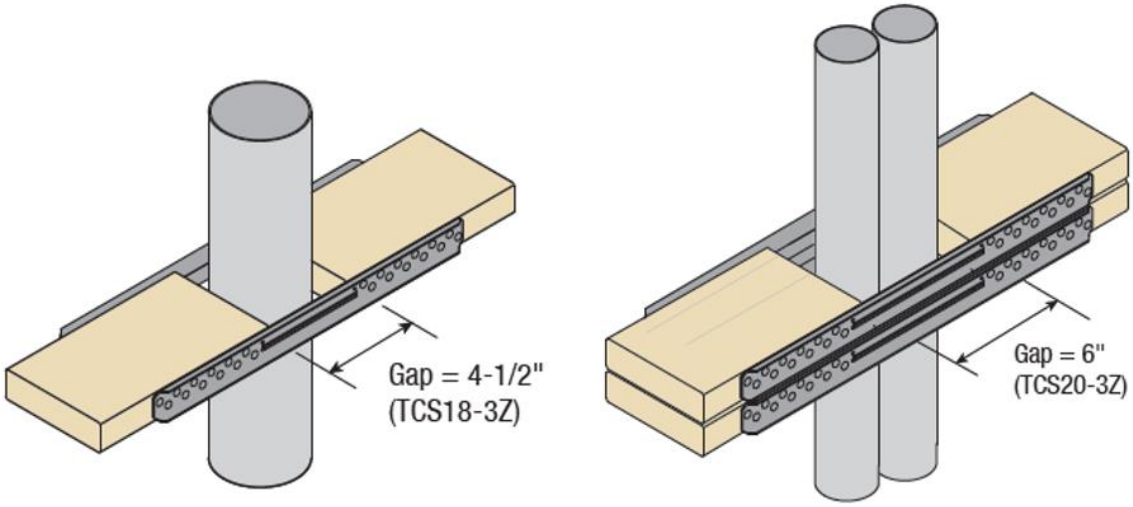

Figure 74. Installed TCS18-3Z/TCS20-3Z Connectors
(Examples: 1 Strap, 2 Side and 2 Straps, 2 Side)

Information contained in this report was developed using report holder's confidential intellectual property (IP) and trade secrets (TS), which is protected by Defend Trade Secrets Act 2016, © DrJ Engineering, LLC

6.2.27 *RSPT4, RSPT6, and RSPT6-2 Stud Plate Ties:*

6.2.27.1 Allowable uplift design values for RSPT4, RSPT6M, RSPT6, and RSPT6-2 stud plate ties are presented in **Table 43**. An Illustration of an example of installation is shown in **Figure 75**.

Table 43. RSPT4, RSPT6M, RSPT6, and RSPT6-2 Stud plate Ties Allowable Uplift Values

Part Number[3]	Installation	Fasteners			Allowable Uplift (lbs)[1,2]	
		Type	Quantity			
			Stud	Top/Sill Plate	DF/SP	HF/SPF
RSPT4	Stud to Double Top Plate	0.131" x 1.5"	4	4	515	440
	Stud to Sill Plate			4	435[4]	375[5]
RSPT6M	Stud to Double Top Plate	0.148" x 1.5"	4	4	755	650
	Stud to Sill Plate			4	655	565
RSPT6	Stud to Double Top Plate	0.148" x 1.5"	4	3	475	415
	Stud to Sill Plate			1	470	405
RSPT6-2	Double Stud to Double Top Plate		8	6	945	830
	Double Stud to Sill Plate			2	785	675

SI: 1 in = 25.4 mm, 1 lb = 4.45 N

4. Refer to **Appendix A**. General Notes for Tables.
1. Allowable loads are provided for a load duration factor (C_D) of 1.6, no further increase is allowed. ASTM A653 Grade 50, Class 3 Structural Steel (F_u = 70-ksi, F_y = 50-ksi). RSPT4 minimum, thickness 20-gauge. ALL RSPT6 minimum thickness 18-gauge.
2. F_1 is 410 lb and F_2 is 350 lb. Evaluated with (3) 0.131" x 3" nails at every stud-to-plate connection. F1 = Load parallel to the wall and F2 = Load perpendicular to the wall.
3. F_1 is 355 lb and F_2 is 210 lb. Evaluated with (3) 0.131" x 3" nails at every stud-to-plate connection.F1 = Load parallel to the wall and F2 = Load perpendicular to the wall.
4. See **Figure 75** for installation examples

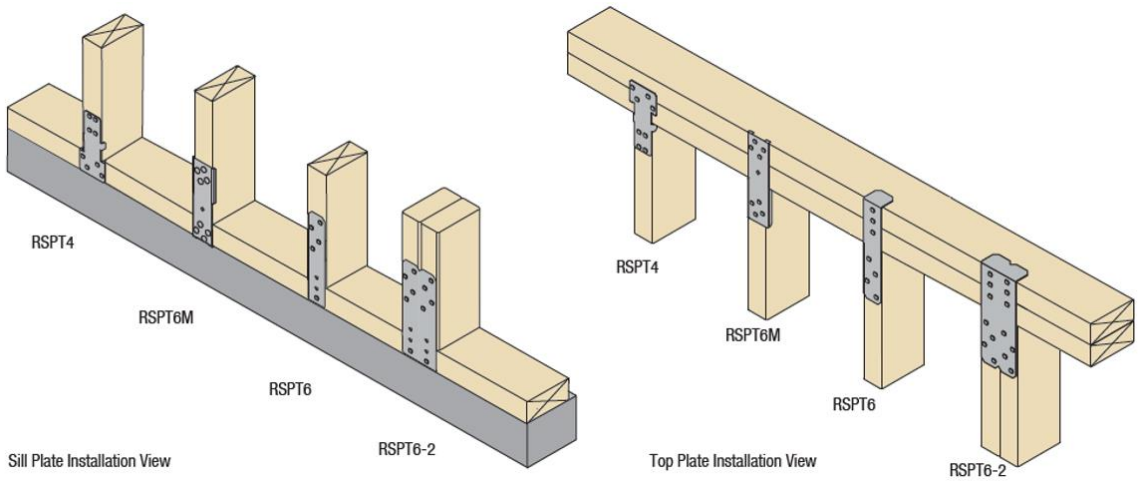

Figure 75. Installed RSPT Connectors

Information contained in this report was developed using report holder's confidential intellectual property (IP) and trade secrets (TS), which is protected by Defend Trade Secrets Act 2016, © DrJ Engineering, LLC

6.3 *QuickTie Screws – Reference Design Values*

6.3.1 QuickTie Screws are used to attach wood framing members in conventional light-frame constructions and to provide resistance against withdrawal, head pull-through, axial, and shear loads.

6.3.2 The design of QuickTie Screws is governed by the applicable code and the provisions for dowel-type fasteners in the NDS.

6.3.3 QuickTie Screws are installed without lead holes as prescribed in the NDS.

6.3.4 Reference lateral design values for shear loads perpendicular to grain and parallel to grain in wood-to-wood connections and steel-to-wood connections are specified in **Table 44** and **Table 45**, respectively.

Table 44. Reference Lateral Design Values (Z) for Connections in Sawn Lumber

Fastener Name	Part Number	Nominal Length (in)	Thread Length (in)	Minimum Side Member Thickness (in)	Minimum Main Member Penetration[4] (in)	Reference Lateral Shear Value[1,2,3] Z (lbs)	
						Wood Species (Specific Gravity)	
						SP/DF-L (0.50)[3]	
						$Z_{\parallel}$	$Z_{\perp}$
SWH	SWH3	3	2 1/4	1.5	1.5	420	330
	SWH35	3 1/2	2 3/4				
	SWH45	4 1/2	3 1/4				
	SWH5	5	3 1/4	1.5	3.5	500	330
	SWH6	6	4 1/4				
	SWH8	8	3 1/4				
SWF	SWF278	2 7/8	2 1/4	1.5	1.2	425	330
	SWF338	3 3/8	2 1/4				
	SWF358	3 5/8	2 1/4				
	SWF45	4 1/2	2 1/4	1.5	1.5	420	330
	SWF5	5	2 1/4				
	SWF6	6	2 1/4				
	SWF638	6 3/8	2 1/4				
	SWF634	6 3/4	2 1/4				
	SWF8	8	2 1/4				
SWT	SWT45	4 1/2	4.3	1.5	3	295[5]	
	SWT6	6	5.8				
SWL	SWL3	2 7/8	1 1/2	1.5	1.38	240	85

SI: 1 in = 25.4 mm, 1 lb = 4.45 N, 1 lb/in = 0.175 kN/m

1. Reference lateral design values apply to two-member single shear connections where both members are of the same specific gravity and the fastener is oriented perpendicular to grain, unless otherwise noted.
2. Tabulated lateral design values (Z) shall be adjusted by all applicable adjustment factors per NDS Table 11.3.1.
3. $Z_{\perp}$ = Lateral Design Values Perpendicular to Grain, $Z_{\parallel}$ = Lateral Design Values Parallel to Grain.
4. Fastener main member penetration is the length embedded in the main member, including the tip.
5. Value is applicable where the main member is loaded parallel to grain and the side member is loaded perpendicular to grain.

Information contained in this report was developed using report holder's confidential intellectual property (IP) and trade secrets (TS), which is protected by Defend Trade Secrets Act 2016, © DrJ Engineering, LLC

Table 45. Reference Lateral Design Values (Z) for Connections with Steel Side Plate

Fastener Name	Minimum Side Member Thickness[4] (in)	Minimum Main Member Penetration[3] (in)	Reference Lateral Shear Value[1,2] Z (lbs)	
			Wood Species (Specific Gravity)	
			SP/DF-L (0.50)[2]	
			$Z_{\parallel}$	$Z_{\perp}$
SWH15	0.075 (14-gauge)	1.425	260	260
	0.105 (12-gauge)	1.395	260	260
	0.120 (11-gauge)	1.380	260	260
	0.134 (10-gauge)	1.366	260	260
	0.179 (7-gauge)	1.321	260	260
	0.239 (3-gauge)	1.261		
SWH2	0.075 (14-gauge)	1.925	330	330
	0.105 (12-gauge)	1.895	330	330
	0.120 (11-gauge)	1.880	330	330
	0.134 (10-gauge)	1.866	330	330
	0.179 (7-gauge)	1.821	330	330
	0.239 (3-gauge)	1.761		
SWH25	0.075 (14-gauge)	2.425	400	400
	0.105 (12-gauge)	2.395	400	400
	0.120 (11-gauge)	2.380	400	400
	0.134 (10-gauge)	2.366	430	430
	0.179 (7-gauge)	2.321	430	430
	0.239 (3-gauge)	2.261		
SWH3 SWH35 SWH45	0.075 (14-gauge)	2.925	710	595
	0.105 (12-gauge)	2.895	730	615
	0.120 (11-gauge)	2.880	740	625
	0.134 (10-gauge)	2.866	750	630
	0.179 (7-gauge)	2.821	780	660
	0.239 (3-gauge)	2.761	780	660

Information contained in this report was developed using report holder's confidential intellectual property (IP) and trade secrets (TS), which is protected by Defend Trade Secrets Act 2016, © DrJ Engineering, LLC

Table 45. Reference Lateral Design Values (Z) for Connections with Steel Side Plate

Fastener Name	Minimum Side Member Thickness[4] (in)	Minimum Main Member Penetration[3] (in)	Reference Lateral Shear Value[1,2] Z (lbs)	
			Wood Species (Specific Gravity)	
			SP/DF-L (0.50)[2]	
			$Z_{\parallel}$	$Z_{\perp}$
SWH5 SWH6 SWH8	0.075 (14-gauge)	4.925	825	820
	0.105 (12-gauge)	4.895	790	815
	0.120 (11-gauge)	4.880	775	810
	0.134 (10-gauge)	4.866	760	
	0.179 (7-gauge)	4.821	710	800
	0.239 (3-gauge)	4.761		
SWH915	0.0353 (20-gauge)	1.465	205	205
SWH925	0.0353 (20-gauge)	1.465	250	270
SWH1015	0.0353 (20-gauge)	1.465	225	220
SWH1025	0.0353 (20-gauge)	1.465	270	290
SWL15, SWL3	0.048 (18-gauge)	1.330	330	310

SI: 1 in = 25.4 mm, 1 lb = 4.45 N, 1 lb/in = 0.175 kN/m

1. Tabulated lateral design values (Z) shall be adjusted by all applicable adjustment factors per NDS Table 11.3.1.
2. $Z_{\perp}$ = Lateral Design Values Perpendicular to Grain, $Z_{\parallel}$ = Lateral Design Values Parallel to Grain.
3. Fastener main member penetration is the length embedded in the main member, including the tip.
4. Tabulated allowable shear values apply to assemblies having a wood main member with a specific gravity of at least 0.50 and a steel side plate with an ultimate tensile strength of at least 65-ksi.

Information contained in this report was developed using report holder's confidential intellectual property (IP) and trade secrets (TS), which is protected by Defend Trade Secrets Act 2016, © DrJ Engineering, LLC

6.3.4.1 Reference withdrawal design values (lb/in) and maximum withdrawal values (lb) are specified in **Table 46**.

Table 46. Reference Withdrawal Design Values, lb/in and Maximum Withdrawal Values

Fastener Name	Part Number	Nominal Length (in)	Thread Length (in)	Withdrawal Design Value[1,2] W (lb/in)		Maximum Withdrawal Design Value[1,2] (lbs)
				Thread Penetration Includes Tip	Thread Penetration Excludes Tip	
				(Wood Specific Gravity) SP/DF-L (0.50)		
SWH	SWH15	1 1/2	1 1/4	310	390	405
	SWH2	2	1 3/4			600
	SWH25	2 1/2	2 1/4			795
	SWH3	3	2 1/4			
	SWH35	3 1/2	2 3/4			990
	SWH45	4 1/2	3 1/4			1,180
	SWH5	5	3 1/4			
	SWH6	6	4 1/4			1,435
	SWH8	8	3 1/4			1,180
SWH9	SWH915	1 1/2	1.2	255		305
	SWH925	2 1/2				
SWH10	SWH1015	1 1/2	1.2	255		305
	SWH1025	2 1/2				
SWF	SWF278	2 7/8	2 1/4	340	480	935
	SWF338	3 3/8	2 1/4			
	SWF358	3 5/8	2 1/4			
	SWF45	4 1/2	2 1/4			
	SWF5	5	2 1/4			
	SWF6	6	2 1/4			
SWF	SWF638	6 3/8	2 1/4			
	SWF634	6 3/4	2 1/4			
	SWF8	8	2 1/4			
SWT	SWT45	4 1/2	4.3	335	-	940
	SWT6	6	5.8			
SWL	SWL15	1 3/8	1 1/8	225	-	250
	SWL3	2 7/8	1 1/2			335

SI: 1 in = 25.4 mm, 1 lb = 4.45 N, 1 lb/in = 0.175 kN/m

1. Tabulated withdrawal values (W) shall be adjusted by all applicable adjustment factors per NDS Table 11.3.1.
2. Minimum fastener penetration into main member of 1" is required. Fastener penetration is the threaded length embedded in the main member.

Information contained in this report was developed using report holder's confidential intellectual property (IP) and trade secrets (TS), which is protected by Defend Trade Secrets Act 2016, © DrJ Engineering, LLC

6.3.4.2 Reference head pull-through design values are specified in **Table 47**.

Table 47. Reference Head Pull-Through Design Values

Fastener Name	Head Diameter (in)	Head Pull-Through Design Value[1,2] P (lbs)
		Wood Species (Specific Gravity)
		SP/DF-L (0.50)
SWH	0.540	790
SWF	0.750	1,210
SWL	0.365	430

SI: 1 in = 25.4 mm, 1 lb = 4.45 N

1. Tabulated pull-through values (P) shall be adjusted by all applicable adjustment factors per NDS Table 11.3.1.
2. Pull-through design values apply to connections having a minimum wood side member thickness of at least 1.5".

6.3.5 *SWT6 Truss-to-Plate Connection Design Values:*

6.3.5.1 SWT6 fasteners are used in the construction of walls that meet the requirements of IBC Section 2308 or IRC Section R602 for the following applications:

6.3.5.1.1 To attach minimum 1$^1/_2$" thick wood trusses, rafters, or floor joists to wood walls.

6.3.5.1.2 To attach minimum 1$^1/_2$" thick gable end trusses to wood walls.

6.3.5.1.3 To attach minimum 1$^1/_2$" thick valley trusses to wood walls.

6.3.5.1.4 To attach minimum 1$^1/_2$" thick wood studs to wall top and bottom plates.

6.3.5.2 At a minimum, walls shall consist of a single or double top plate installed in accordance with IBC Section 2308.9.3.2[30] or IRC Section R602.3.2.

6.3.5.3 SWT6 fasteners are used in buildings requiring design in accordance with IBC Section 1609 or wind analysis in accordance with IRC Section R301.2.1.

6.3.5.4 SWT6 fasteners are used in buildings requiring design in accordance with IBC Section 1613 or seismic analysis in accordance with IRC Section R301.2.2.

6.3.5.5 To maintain a continuous uplift load path, connections in the same area must be stacked on the same side of the wall (i.e., rafter to top plate connection and top plate to stud connection).

6.3.5.6 Allowable design loads for uplift and lateral resistance for truss, rafter, and joist to top plate connections are provided in **Table 48**.

6.3.5.7 Allowable design loads are applicable to fasteners installed in accordance with **Table 48**.

Information contained in this report was developed using report holder's confidential intellectual property (IP) and trade secrets (TS), which is protected by Defend Trade Secrets Act 2016, © DrJ Engineering, LLC

Table 48. Allowable Uplift and Lateral Loads for SWT6 Screw in Truss/Rafter/Joist to Top Plate Connections

Fastener Designation	Minimum Penetration into Truss/Rafter/Joist[1] (in)	Top Plate	Fastener Angle to Vertical[5]	Allowable Loads[2,3] (lbs)		
				Uplift	F1	F2
				Wood Species[4] (Specific Gravity)		
				SP (0.55)		
SWT6	$2^1/_2$	Double	22.5°	940	360	705
			0°		530	500

SI: 1 in. = 25.4 mm, 1 lb. = 4.45 N

1. Wood truss, rafter, or floor joist members shall be a minimum of 2" nominal thickness. Design of truss, rafter or floor joist is by others.
2. Includes 1.6 duration of load increase for wind and seismic. No further duration of load increases permitted. Reduce design values for other load durations as applicable.
3. See **Figure 76** for load directions.
4. Equivalent specific gravity of Structural Composite Lumber (SCL) shall be equal to or greater than the specific gravities provided in this table. Refer to product information from SCL manufacturer.
5. Install fastener at an upward angle from the vertical of 20° to 25° (22.5° is optimal) or 0° (see **Figure 77**). For installation between 20° and 25°, design values of 22.5° may be used.

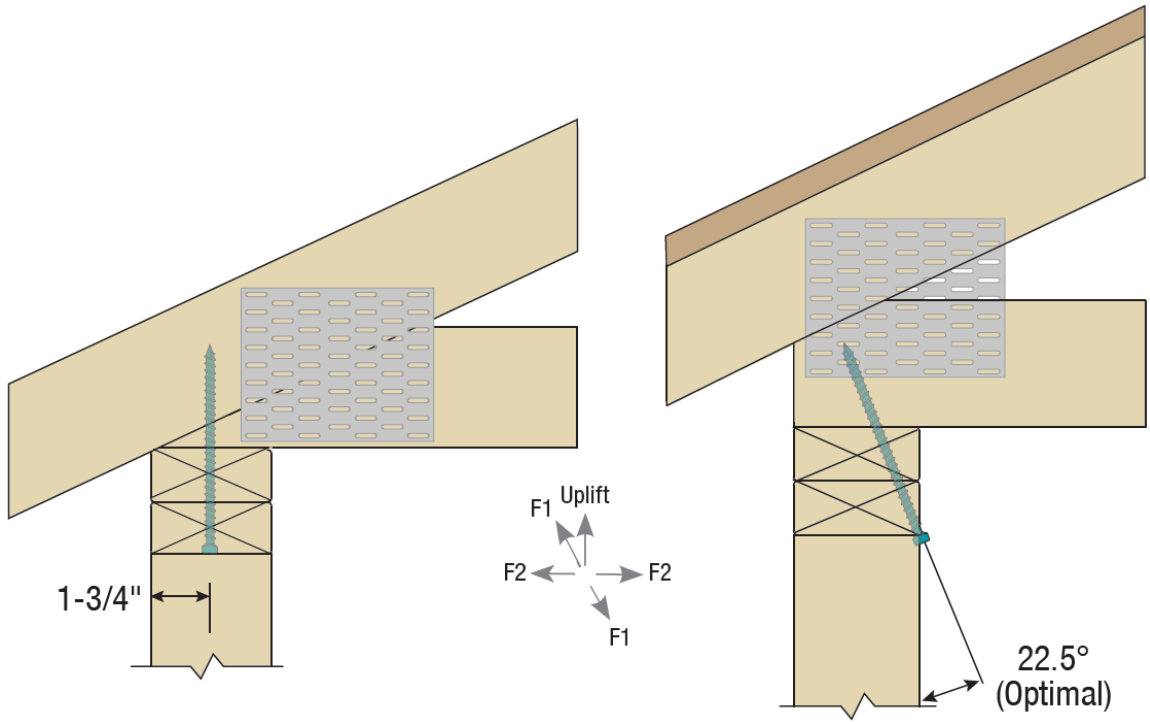

Figure 76. Truss/Rafter/Joist to Double Top Plate - Uplift and Lateral Load (F1 and F2) Directions

Information contained in this report was developed using report holder's confidential intellectual property (IP) and trade secrets (TS), which is protected by Defend Trade Secrets Act 2016, © DrJ Engineering, LLC

6.3.5.8 Allowable design loads for uplift and lateral resistance for gable end truss to top plate connections are provided in **Table 49**.

6.3.5.9 Allowable design loads are applicable to fasteners installed in accordance with **Table 49**.

Table 49. Allowable Uplift and Lateral Loads for SWT6 Screw in Gable End Truss to Top Plate Connections

Fastener Designation	Minimum Penetration into Gable End Truss (in)[1]	Top Plate	Fastener Angle to Vertical[5]	Allowable Loads[2,3] (lbs)		
				Uplift	F1	F2
				Wood Species[4] (Specific Gravity)		
				SP (0.55)		
SWT6	3	Double	0°	940	650	565

SI: 1 in. = 25.4 mm, 1 lb. = 4.45 N

1. Gable end truss bottom chord shall be a minimum of 2" nominal thickness. Design of truss, rafter, or floor joist is by others.
2. Includes 1.6 duration of load increase for wind and seismic. No further duration of load increases permitted. Reduce design values for other load durations as applicable.
   See **Figure 77** for load directions.
3. Equivalent specific gravity of SCL shall be equal to or greater than the specific gravities provided in this table. Refer to product information from SCL manufacturer.
4. Install fastener at an upward angle from the vertical of 0°. Fastener edge distance is 3/4" (see **Figure 78**).

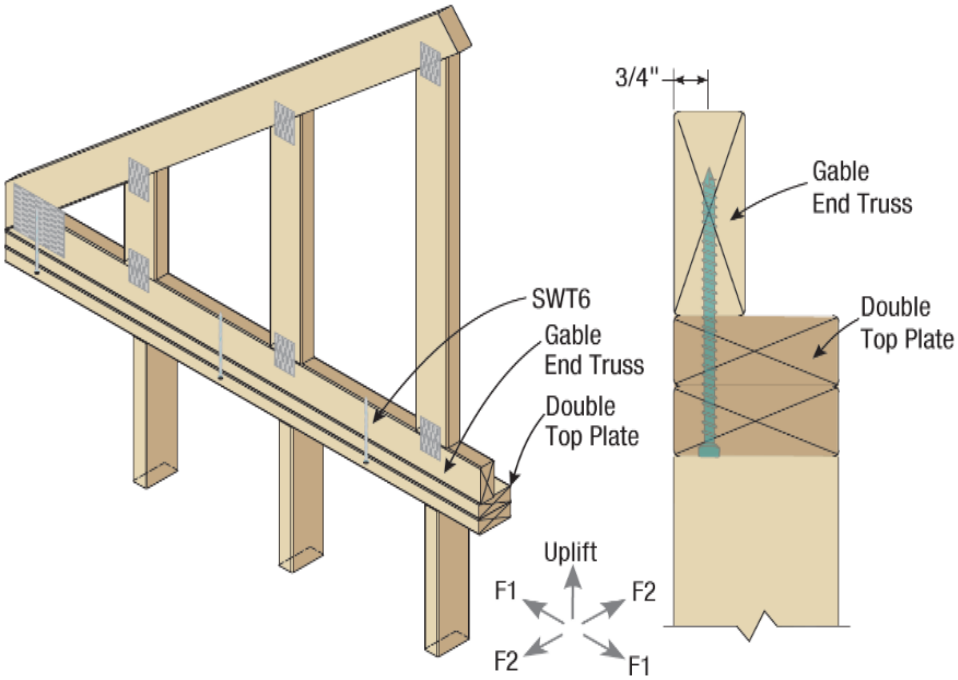

Figure 77. Gable End Truss to Top Plate - Uplift and Lateral Load (F1 and F2) Directions

Information contained in this report was developed using report holder's confidential intellectual property (IP) and trade secrets (TS), which is protected by Defend Trade Secrets Act 2016, © DrJ Engineering, LLC

6.3.5.10 Allowable design loads for uplift and lateral resistance for valley truss connections are provided in **Table 50**.

6.3.5.11 Allowable design loads are applicable to fasteners installed in accordance with **Table 50**.

Table 50. Allowable Uplift Load for SWT6 Screw in Valley Truss Connection

Fastener Designation	Minimum Penetration into Main Member (in)	Fastener Angle to Vertical[1]	Allowable Uplift Load[2,3,4] (lbs)	
			Wood Species[5] (Specific Gravity)	
			SP (0.55)	
SWT6	2	0°	675	

SI: 1 in. = 25.4 mm, 1 lb. = 4.45 N

1. Install fastener at an angle from the vertical of 0° with the fastener centered on the truss members (see **Figure 78**).
2. Truss members shall be a minimum of 2" nominal thickness. Sheathing may be installed between the truss members, as shown in **Figure 78**.
3. Lower truss member may have a maximum 6:12 pitch. A minimum 2" penetration into the main member is required (see **Figure 78**).
4. Includes 1.6 duration of load increase for wind and seismic. No further duration of load increases permitted. Reduce design values for other load durations as applicable.
5. Equivalent specific gravity of SCL shall be equal to or greater than the specific gravities provided in this table. Refer to product information from SCL manufacturer.

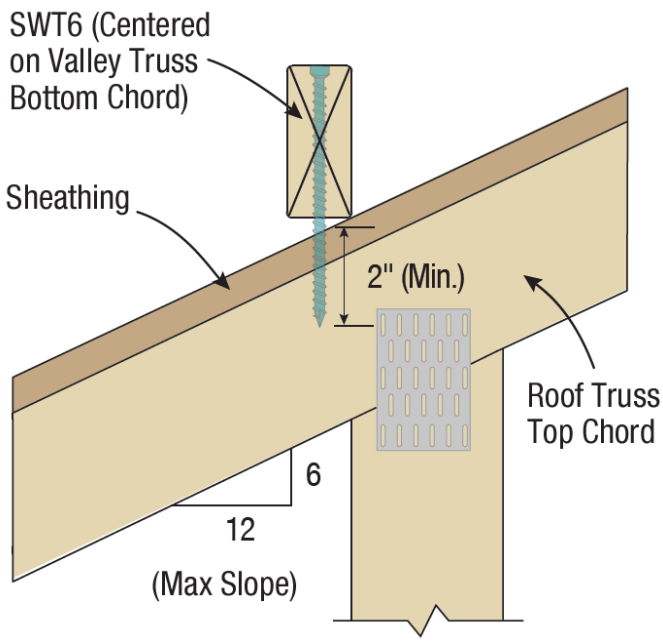

Figure 78. Valley Truss Connection

Information contained in this report was developed using report holder's confidential intellectual property (IP) and trade secrets (TS), which is protected by Defend Trade Secrets Act 2016, © DrJ Engineering, LLC

6.3.6 *SWT45 Stud-to-Plate Connection Design Values:*

6.3.6.1 Allowable design loads for uplift and lateral resistance in stud to plate connections for fasteners installed in the narrow face of the stud are provided in **Table 51**.

6.3.6.2 Allowable design loads are applicable to fasteners installed in accordance with **Table 51**.

Table 51. Allowable Design Values for Stud to Plate Connections, Fastener Installed in Narrow Face

Fastener Designation[1]	Nominal Plate Thickness[2]	Allowable Loads[3,4] (lbs)	
		Uplift	Lateral (F2)[5]
		Wood Species (Specific Gravity)	
		SP (0.55)	
SWT45	2x	565	405

SI: 1 in. = 25.4 mm, 1 lb. = 4.45 N

1. Fastener shall be installed at an angle between 20° - 30°. 22° is optimal (see **Figure 79**).
2. Dimensional lumber members shall be a minimum of 2" nominal thickness.
3. Includes 1.6 duration of load increase for wind and seismic. No further duration of load increases permitted. Reduce design values for other load durations as applicable.
4. Limit: one fastener installed in the narrow face of each stud.
5. The lateral load direction (F2) is perpendicular to the face of the wall.

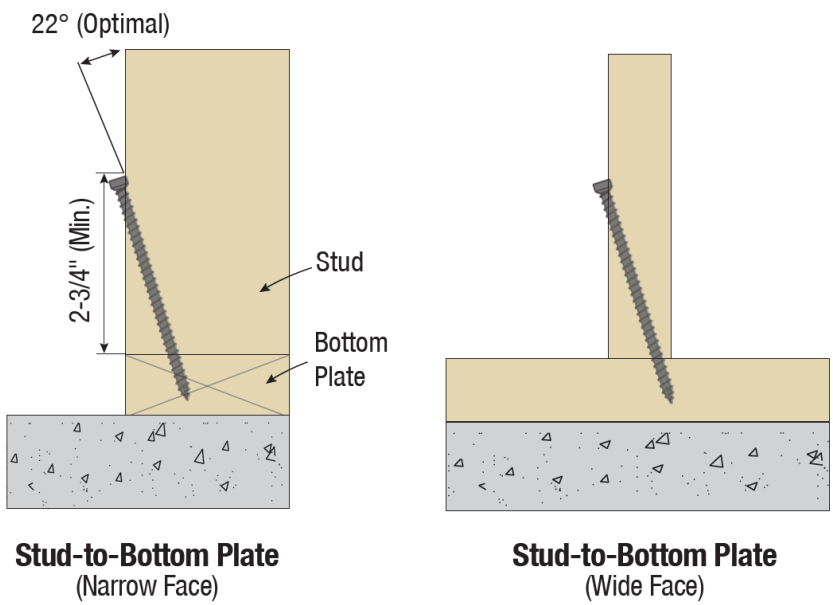

Figure 79. Fastener Installed in Narrow Face and Wide Face of Stud

Information contained in this report was developed using report holder's confidential intellectual property (IP) and trade secrets (TS), which is protected by Defend Trade Secrets Act 2016, © DrJ Engineering, LLC

6.4 The allowable loads provided in this report are for the QTS, QuickTie Connectors, QuickTie Screws and QuickTie Adhesives, only. The adequacy of the connected structural framing members to resist the loads applied to them by the QuickTie products, building type, and occupancy and/or the environment shall be verified in accordance with the requirements of the building code adopted by the jurisdiction in which the project is to be constructed.

6.4.1 *Portal Frame with Hold-Downs (PFH):*

6.4.1.1 Use of Method PFH shall be in accordance with IRC Section R602.10 and IRC Section R602.10.6.2.

6.4.1.2 The maximum allowable tensile loads (based on Allowable Stress Design) of the QTS are presented in **Table 2**.

6.4.1.3 Two (2) QuickTie Orange cables shall be used to meet the required two (2) 3,500 lb. hold-downs with one (1) QuickTie Orange on each side of the pier. QuickTie Blue cables shall be used on the non-pier end of the portal frame where only a single 1,000 lb. hold-down is required. The detail below using QTS is considered equivalent to the Method PFH detail of the IRC (**Figure 80** and **Figure 81**).

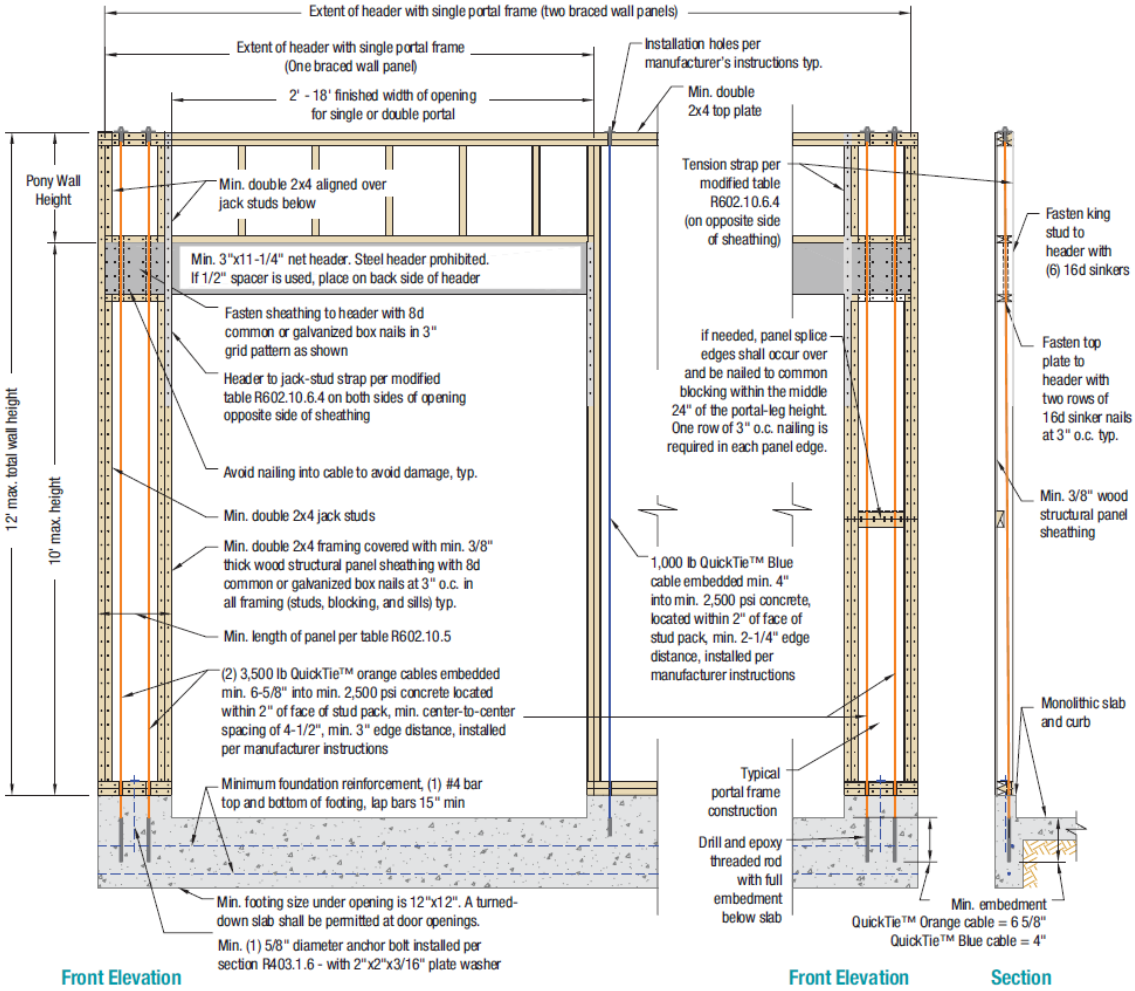

Figure 80. Diagram for Portal Frame with QuickTie Cables

Information contained in this report was developed using report holder's confidential intellectual property (IP) and trade secrets (TS), which is protected by Defend Trade Secrets Act 2016, © DrJ Engineering, LLC

MODIFIED TABLE R602.10.6.4 TENSION STRAP CAPACITY FOR RESISTING WIND PRESSURES PERPENDICULAR TO METHOD PFH

MINIMUM WALL STUD FRAMING NOMINAL SIZE AND GRADE	MAXIMUM PONY WALL HEIGHT (FT)	MAXIMUM TOTAL WALL HEIGHT (FT)	MAXIMUM OPENING WIDTH (FT)	ADJACENT TO QUICKTIE™ BLUE CABLE TENSION STRAP CAPACITY REQUIRED (LB)[1,2,3]						ADJACENT TO QUICKTIE™ ORANGE CABLE TENSION STRAP CAPACITY REQUIRED (LB)[1,2,3]					
				Ultimate Design Wind Speed, Vult (mph)						Ultimate Design Wind Speed, Vult (mph)					
				110	115	130	110	115	130	110	115	130	110	115	130
				Exposure B			Exposure C			Exposure B			Exposure C		
2X4 No. 2 Grade	0	10	18	NR	NR	NR	NR	NR	NR	NR	NR	NR	NR	NR	NR
	1	10	9	NR	NR	NR	NR	NR	750	NR	NR	NR	NR	NR	NR
			16	NR	NR	1,050	1,075	1,500	2,950	NR	NR	NR	NR	NR	450
			18	NR	275	1,375	1,400	1,850	DR	NR	NR	NR	NR	NR	DR
	2	10	9	NR	NR	475	500	875	2,125	NR	NR	NR	NR	NR	NR
			16	775	1,175	2,525	2,550	3,125	DR	NR	NR	NR	NR	625	DR
			18	1,075	1,500	2,950	2,975	DR	DR	NR	NR	450	475	DR	DR
	2	12	9	150	500	1,650	1,675	2,175	DR	NR	NR	NR	NR	NR	DR
			16	1,875	2,375	DR	DR	DR	DR	NR	NR	DR	DR	DR	DR
			18	2,425	2,975	DR	DR	DR	DR	NR	475	DR	DR	DR	DR
	4	12	9	1,275	1,750	DR	DR	DR	DR	NR	NR	DR	DR	DR	DR
			12	2,225	2,775	DR	DR	DR	DR	NR	275	DR	DR	DR	DR
2X6 Stud Grade	2	12	9	NR	NR	700	700	1,025	2,050	NR	NR	NR	NR	NR	NR
			16	825	1,150	2,225	2,225	2,675	DR	NR	NR	NR	NR	175	DR
			18	1,200	1,550	2,725	2,750	DR	DR	NR	NR	225	250	DR	DR
	4	12	9	450	750	1,700	1,725	2,125	DR	NR	NR	NR	NR	NR	DR
			16	1,050	1,400	DR	DR	DR	DR	NR	NR	DR	DR	DR	DR
			18	2,350	2,800	DR	DR	DR	DR	NR	300	DR	DR	DR	DR

NOTES:

1. DR = Design Required
2. NR = Not Required
3. Straps shall be installed in accordance with manufacturer's recommendations.

Figure 81. Design Parameters for Portal Frame with QuickTie Cables

6.5 *Reference Lateral Design Values for Deck Ledger to Stud Attachment*

6.5.1 Installation details for ledger to stud connections for 2 x 6, 2 x 8, 2 x 10 and 2 x 12 ledgers are shown in **Figure 82**. Installation includes:

6.5.1.1 Direct connection

6.5.1.2 With one layer of $^5/_8$" GWB sheathing in between the ledger and framing members

6.5.1.3 With two layers of $^5/_8$" GWB sheathing in between the ledger and framing members

6.5.2 Distances shown in **Figure 82** are ideal. See **Table 53** for minimum edge and end distance requirements.

Information contained in this report was developed using report holder's confidential intellectual property (IP) and trade secrets (TS), which is protected by Defend Trade Secrets Act 2016, © DrJ Engineering, LLC

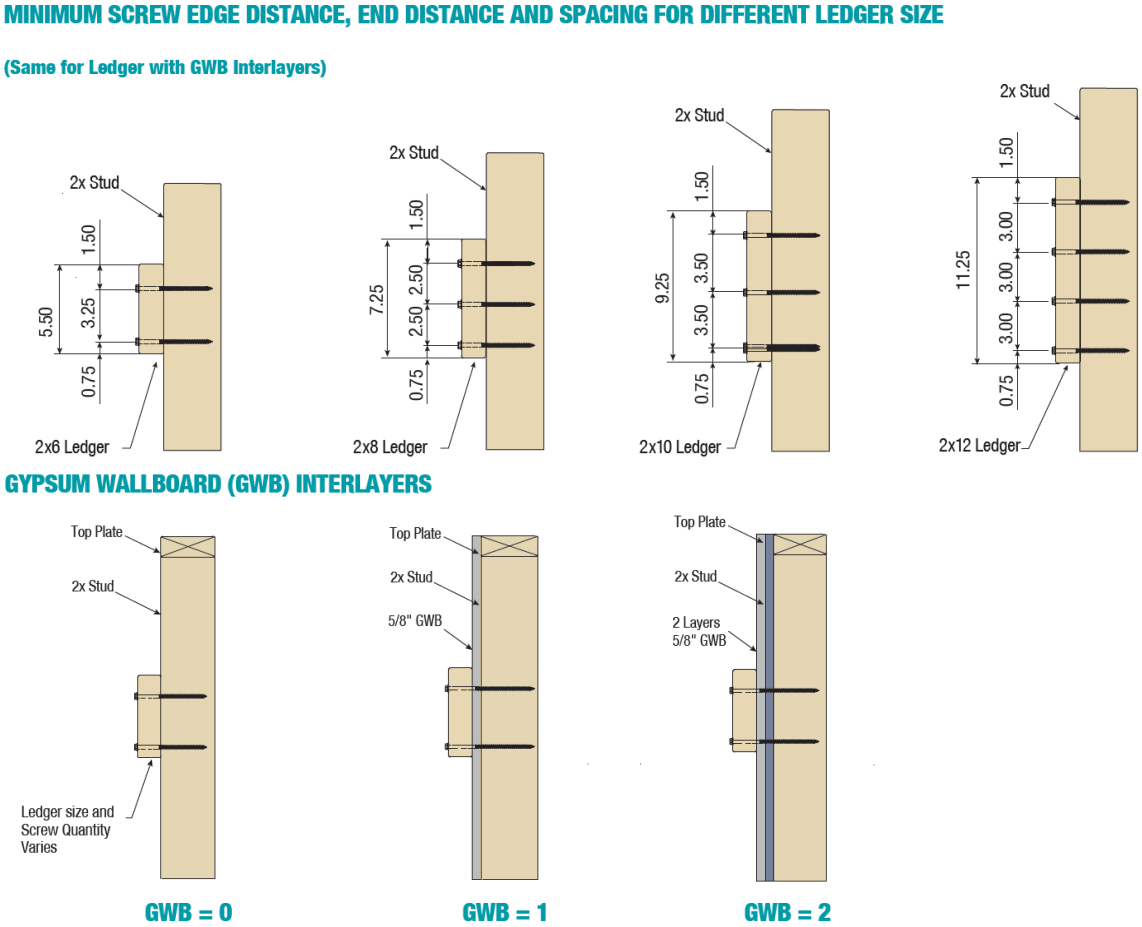

Figure 82. Ledger Attachment Details

6.5.3 Allowable loads for deck ledger to stud connections installed with QuickTie SWH screws detailed in **Figure 82** are provided in **Table 52**.

6.5.3.1 Allowable loads are designated per stud connection, which refers to the specified number of SWH screws shown in **Figure 82**.

6.5.3.1.1 A 2 x 6 ledger requires two SWH screws at each stud location.

6.5.3.1.2 A 2 x 8 ledger requires three SWH screws at each stud location.

6.5.3.1.3 A 2 x 10 ledger requires three SWH screws at each stud location.

6.5.3.1.4 A 2 x 12 ledger requires four SWH screws at each stud location.

Information contained in this report was developed using report holder's confidential intellectual property (IP) and trade secrets (TS), which is protected by Defend Trade Secrets Act 2016, © DrJ Engineering, LLC

Table 52. Design Values for Ledger to Stud Attachment

Fastener Designation	Nominal Fastener Length[6]	Minimum Penetration into Main Member (in)	Layers of GWB[5]	Nominal Ledger Species	Nominal Stud Species	Allowable Load per Stud Connection[2,3,4] (lbs)			
						Ledger Size[1]			
						2 x 6	2 x 8	2 x 10	2 x 12
SWH3	3	1 1/2	0	SPF (0.42)	SPF (0.42)	310	465	465	620
SWH35	≥ 3 1/2	2	0			355	535	535	715
SWH35	3 1/2	1 3/8	1			220	330	330	440
SWH4	≥ 4	1 7/8	1			260	385	385	515
SWH4	4	1 1/4	2			150	225	225	300
SWH5	≥ 5	2 1/4	2			190	280	280	375
SWH3	3	1 1/2	0	SPF (0.42)	DF-L (0.50)	360	540	540	720
SWH35	≥ 3 1/2	2	0			380	565	565	755
SWH35	3 1/2	1 3/8	1			255	385	385	510
SWH4	≥ 4	1 7/8	1			265	400	400	535
SWH4	4	1 1/4	2			180	265	265	355
SWH5	≥ 5	2 1/4	2			195	290	290	385
SWH3	≥ 3	1 1/2	0	SPF (0.42)	SP (0.55)	390	580	580	775
SWH35	≥ 3 1/2	1 3/8	1			270	405	405	540
SWH4	≥ 4	1 1/4	2			195	295	295	390
SWH3	3	1 1/2	0	DF-L (0.50)	SPF (0.42)	355	535	535	710
SWH35	≥ 3 1/2	2	0			430	645	645	860
SWH35	3 1/2	1 3/8	1			230	340	340	455
SWH4	≥ 4	1 7/8	1			280	420	420	560
SWH4	4	1 1/4	2			155	230	230	305
SWH5	≥ 5	2 1/4	2			195	290	290	385
SWH3	3	1 1/2	0	DF-L (0.50)	DF-L (0.50)	425	640	640	850
SWH35	≥ 3 1/2	2	0			460	690	690	920
SWH35	3 1/2	1 3/8	1			275	410	410	545
SWH4	≥ 4	1 7/8	1			295	440	440	585
SWH4	4	1 1/4	2			180	275	275	365
SWH5	≥ 5	2 1/4	2			200	295	295	395
SWH3	3	1 1/2	0	DF-L (0.50)	SP (0.55)	465	695	695	925
SWH35	≥ 3 1/2	2	0			475	710	710	950
SWH35	≥ 3 1/2	1 3/8	1			300	450	450	600
SWH4	≥ 4	1 1/4	2			200	300	300	400

Information contained in this report was developed using report holder's confidential intellectual property (IP) and trade secrets (TS), which is protected by Defend Trade Secrets Act 2016, © DrJ Engineering, LLC

Table 52. Design Values for Ledger to Stud Attachment

Fastener Designation	Nominal Fastener Length[6]	Minimum Penetration into Main Member (in)	Layers of GWB[5]	Nominal Ledger Species	Nominal Stud Species	Allowable Load per Stud Connection[2,3,4] (lbs)			
						Ledger Size[1]			
						2 x 6	2 x 8	2 x 10	2 x 12
SWH3	3	1 1/2	0	SP (0.55)	SPF (0.42)	365	550	550	730
SWH35	≥ 3 1/2	2	0			430	670	670	890
SWH35	3 1/2	1 3/8	1			230	345	345	465
SWH4	≥ 4	1 7/8	1			285	430	430	570
SWH4	4	1 1/4	2			155	230	230	310
SWH5	≥ 5	2 1/4	2			195	295	295	390
SWH3	3	1 1/2	0	SP (0.55)	DF-L (0.50)	440	660	660	880
SWH35	≥ 3 1/2	2	0			490	735	735	980
SWH35	3 1/2	1 3/8	1			280	415	415	555
SWH4	≥ 4	1 7/8	1			300	450	450	600
SWH4	4	1 1/4	2			185	275	275	365
SWH5	≥ 5	2 1/4	2			200	300	300	400
SWH3	3	1 1/2	0	SP (0.55)	SP (0.55)	490	735	735	975
SWH35	≥ 3 1/2	2	0			510	770	770	1,025
SWH35	≥ 3 1/2	1 3/8	1			310	460	460	615
SWH4	≥ 4	1 1/4	2			205	305	305	405

SI: 1 in = 25.4 mm, 1 lb = 4.45 N

1. Two fasteners are required for 2 x 6 ledger connections. Three fasteners are required for 2 x 8 and 2 x 10 ledger connections. Four fasteners are required for 2 x 12 ledger connections. Additional fasteners are prohibited.
2. Allowable loads shall be limited to parallel-to-grain loaded solid sawn main members (minimum 2" nominal). Wood side members shall be loaded perpendicular to grain.
3. Allowable loads are shown at the wood load duration factor of C_D = 1.00. Loads may be increased for load duration as permitted by the building code up to a C_D = 1.60. All adjustment factors shall be applied per the NDS. For in-service moisture content greater than nineteen percent (19%), use Wet Service Factor (C_M) = 0.70.
4. Fasteners shall be centered in the stud and spaced as shown in **Figure 82**.
5. GWB must be attached as required per the building code.
6. Where designated as, ≥ *"Fastener Length"* allowable loads per stud connection are applicable to fasteners with lengths greater than or equal to the specified length. Fastener shall not penetrate through the stud depth.

6.6 Alternative techniques shall be permitted in accordance with accepted engineering practice and experience. These provisions for the use of alternative materials, designs, and methods of construction are not intended to prevent the installation of any material or to prohibit any design or method of construction not specifically prescribed herein. This includes, but is not limited to, the following areas of engineering: mechanics of materials, structures, building science, and fire science.

Information contained in this report was developed using report holder's confidential intellectual property (IP) and trade secrets (TS), which is protected by Defend Trade Secrets Act 2016, © DrJ Engineering, LLC

7 Certified Performance[31]

7.1 All construction methods shall conform to accepted engineering practices to ensure durable, livable, and safe construction and shall demonstrate acceptable workmanship reflecting journeyman quality of work of the various trades.[32]

7.2 The strength and rigidity of the component parts and/or the integrated structure shall be determined by engineering analysis or by suitable load tests to simulate the actual loads and conditions of application that occur.[33]

8 Regulatory Evaluation and Accepted Engineering Practice

8.1 The QTS, Quick Connectors, QuickTie Screws, and QuickTie Adhesives comply with the following legislatively adopted regulations and/or accepted engineering practice for the following reasons:

8.1.1 Structural performance of connectors under uplift, compression, and lateral load conditions where applicable.

8.1.2 Compliance for use in buildings assigned to Seismic Design Categories A through F.

8.1.3 QuickTie Screws were tested and evaluated to determine their structural resistance properties that were used to develop reference design values for Allowable Stress Design (ASD). The following properties were evaluated:

8.1.3.1 Bending yield in accordance with ASTM F1575

8.1.3.2 Tensile and shear strengths in accordance with AISI S904

8.1.3.3 Lateral shear, withdrawal, and head pull-through strengths in accordance with ASTM D1761

8.1.4 QuickTie SWT Screws were evaluated:

8.1.4.1 As an alternate means of attaching metal plate connected wood trusses, rafters, or floor joists, to the tops of walls to provide uplift and lateral load resistance. The fasteners were evaluated for shear strength, withdrawal strength, and head pull-through strength for use as an alternative to toenail connections, hurricane and seismic clips/straps, or nails in tension (uplift) load applications.

8.1.4.2 As an alternative means of attaching wall studs to top and bottom plates. The fasteners were evaluated for shear strength, withdrawal strength, and head pull-through strength for use as an alternative to toenail connections.

8.1.4.3 For lateral strength of ledger connections to wood-framed walls. This applicable includes zero, one, or two layers of $^{5}/_{8}$" GWB between the ledger and the wall studs.

8.1.4.4 Compliance for use as an alternative to the Portal Frame with Hold-Down (PFH) as prescribed in IRC Section R602.10.6.2.

8.1.5 SWH screws were evaluated for corrosion resistance in accordance with ASTM B117 and ASTM G85.

8.1.5.1 Corrosion resistance for all other QuickTie Screws is outside the scope of this report.

8.1.5.2 Compliance of QE-1 and QE-2 for use as anchorage to concrete foundation in accordance with ACI 318 as specified in IBC Section 1901.3.

8.1.5.2.1 Evaluated in accordance with ACI 355.4 as specified in Chapter 17 of ACI 318.

8.2 Any building code, regulation and/or accepted engineering evaluations (i.e., research reports, duly authenticated reports, etc.) that are conducted for this Listing were performed by DrJ, which is an ISO/IEC 17065 accredited certification body and a professional engineering company operated by RDP or approved sources. DrJ is qualified[34] to practice product and regulatory compliance services within its scope of accreditation and engineering expertise,[35] respectively.

8.3 Engineering evaluations are conducted with DrJ's ANAB accredited ICS code scope of expertise, which is also its areas of professional engineering competence.

Information contained in this report was developed using report holder's confidential intellectual property (IP) and trade secrets (TS), which is protected by Defend Trade Secrets Act 2016, © DrJ Engineering, LLC

9 Installation

9.1 Installation shall comply with the approved construction documents, the manufacturer installation instructions, this report, and the applicable building code.

9.1.1 Refer to the specific product sections of this report as applicable.

9.2 In the event of a conflict between the manufacturer installation instructions and this report, contact the manufacturer for counsel on the proper installation method.

9.3 The QTS and Quick Connectors shall be installed in accordance with the manufacturer published installation instructions and this report.

9.4 A copy of the manufacturer installation instructions shall be available at all times on the jobsite during installation.

9.5 *SPArtan Sill Plate Anchor Installation*

9.5.1 Clean the top surface of sill plate and mark the SPArtan anchor location(s).

9.5.2 Use a rotary hammer drill and SPArtan stepped drill bit (sold by QuickTie Products, Inc., see **Figure 83** and **Figure 84**) to drill a hole in the sill plate. Stop and remove wood dust as necessary (see **Section 9.5.3**).

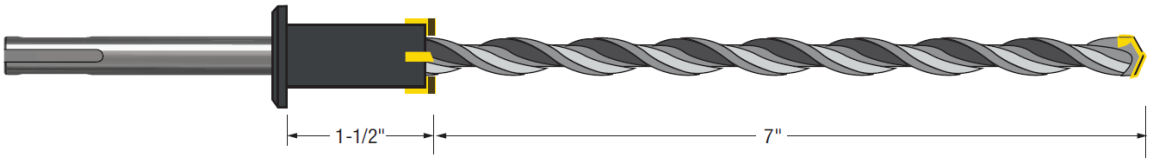

Figure 83. Proprietary SPArtan Drill Bit (Drill Bit Supplied by QuickTie Products, Inc.)

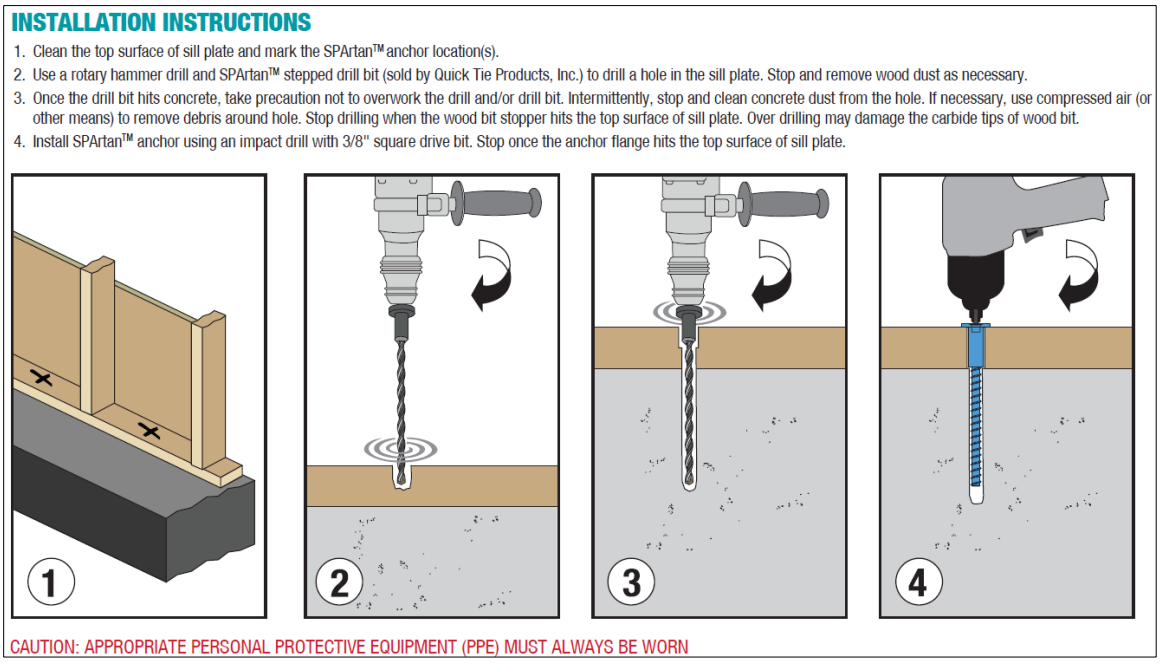

Figure 84. Installation of SPArtan

Information contained in this report was developed using report holder's confidential intellectual property (IP) and trade secrets (TS), which is protected by Defend Trade Secrets Act 2016, © DrJ Engineering, LLC

9.5.3 Once the drill bit hits concrete, take precaution not to overwork the drill and/or drill bit. Intermittently, stop and clean concrete dust from the hole. If necessary, use compressed air (or other means) to remove debris around hole. Stop drilling when the wood bit stopper hits the top surface of sill plate. Over-drilling may damage the carbide tips of wood bits.

9.5.4 Install SPArtan anchor using an impact gun with square drive bit. Stop once the anchor flange hits the top surface of sill plate. ***Note:*** Appropriate Personal Protection Equipment (PPE) must be worn.

9.6 *PBA (Post Base Anchor) Installation*

9.6.1 Use all fasteners as specified in **Table 24** to achieve the full capacity.

9.6.2 The designer or specifier shall check the requirements and capacity of wood post and concrete (embedment, edge distance and end distance) for resisting uplift loads.

9.6.3 Nails (16d common) and fastener assembly ($^5/_8$" threaded rod with heavy hex nut or anchor bolt, and washer [$2^3/_4$" x $2^3/_4$" x $^3/_8$"] are not included).

9.6.4 Clean concrete surface, place PBA Strap and install fastener assembly.

9.6.5 Place standoff plate and then the wood post. The top of the heavy hex nut must be installed flush with underside of standoff plate with a square washer below the hex nut.

9.6.6 Use specified fasteners to attach wood post to PBA Strap.

9.7 *QuickTie Girder Connector (QGC)*

9.7.1 The QTO cable shall be installed per manufacturer installation instructions.

9.7.2 At a minimum, the threaded rod and nut shall be installed finger tightened.

9.7.3 QTO cable or threaded rod shall be connected to the top plate prior to fastening the QGC to the truss/rafter.

9.8 *QuickTie Screws*

9.8.1 Lead holes are not required, but may be used where wood is prone to splitting.

9.8.1.1 Refer to NDS Section 12.1 for appropriate size of lead hole.

9.8.2 Screws shall be installed with the appropriate rotating powered driver.

9.8.3 Minimum requirements for screw spacing, edge distance, and end distance shall be in accordance with **Table 53**.

Table 53. Screw Spacing, Edge Distance, and End Distance Requirements[1] (in)

Connection Geometry	SWH9xx	SWH10xx	SWH	SWF	SWT	SWL
Edge Distance – Load in any direction	$^1/_2$		$^5/_8$			$^1/_2$
End Distance – Load parallel to grain, towards end	$2^5/_8$	3	$3^5/_8$		$3^3/_8$	$2^5/_8$
End Distance – Load parallel to grain, away from end	$1^3/_4$	2	$2^1/_2$		$2^1/_4$	$1^3/_4$
End Distance – Load perpendicular to grain	$1^3/_4$	2	$2^1/_2$		$2^1/_4$	$1^3/_4$
Spacing between Fasteners in a Row – Parallel to grain	$2^5/_8$	3	$3^5/_8$		$3^3/_8$	$2^5/_8$
Spacing between Fasteners in a Row – Perpendicular to grain	$1^3/_4$	2	$2^1/_2$		$2^1/_4$	$1^3/_4$
Spacing between Rows of Fasteners – In-line	$^7/_8$	1	$1^1/_4$		$1^1/_8$	$^7/_8$
Spacing between Rows of Fasteners – Staggered[2]	$^1/_2$		$^5/_8$			$^1/_2$

SI: 1 in = 25.4 mm

1. Edge distances, end distances, and spacing of fasteners shall be sufficient to prevent splitting of the wood or as shown in this table, whichever is the more restrictive.
2. Values for *"Spacing between Rows of Fasteners-Staggered"* apply where the screws in adjacent rows are offset by one-half of the *"Spacing between Fasteners in a Row"*.

Information contained in this report was developed using report holder's confidential intellectual property (IP) and trade secrets (TS), which is protected by Defend Trade Secrets Act 2016, © DrJ Engineering, LLC

9.8.4 *SWT Screw Connections:*

9.8.4.1 *Truss Connections:*

9.8.4.1.1 For truss/rafter/joist to top plate connections, install SWT6 fasteners upward through the wall top plates or wood structural framing member at the bottom corner of the top plate(s) and into the center of the wood truss or rafter. The fastener should be installed at an upward angle from the vertical of 20° to 25° and should penetrate the wood truss, rafter, or joist within $^1/_4$" of the centerline. Fasteners located between studs may be installed at a 90° angle.

9.8.4.1.2 If the wood truss, rafter, or floor joist is located directly over a top plate splice, offset the fastener $^1/_4$" to one side of the splice. Note that the splice may be in either top plate.

9.8.4.1.3 Minimum penetration for truss, rafter, or floor joist to top plate connections is $2^1/_2$".

9.8.4.1.4 Minimum penetration for gable truss to top plate connections is 3".

9.8.4.1.5 Minimum penetration into the main member and sheathing for valley truss connections is 2".

9.8.4.1.6 Minimum requirements for fastener spacing, edge distance and end distance shall be in accordance with **Table 53**.

9.8.4.2 *Stud-to-Plate Connections:*

9.8.4.2.1 Install SWT45 screws through the stud into the wall top or bottom plate. The fastener should be installed at an angle from the vertical of 20° to 30°.

9.8.4.2.2 Minimum requirements for fastener spacing, edge distance, and end distance shall be in accordance with **Table 53**, with the following exception:

9.8.4.2.2.1 Fasteners shall be located a minimum of $2^3/_4$" from the end of the stud.

10 Substantiating Data

10.1 Testing has been performed under the supervision of a professional engineer and/or under the requirements of ISO/IEC 17025 as follows:

10.1.1 Test reports for evaluation of the QTS and Quick Connectors for the QTS Assembly's Tension Load Strength and Elongation Properties (Pre-load and 30+ Day Relaxation)

10.1.2 HTS and MTS connector testing in accordance with ASTM D1761

10.1.3 Test reports for connector uplift, gravity and lateral loads

10.1.4 Test report for QTS assemblies

10.1.5 Fastener bending yield testing in accordance with ASTM F1575

10.1.6 Fastener tensile and shear strength testing in accordance with AISI S904

10.1.7 Fastener lateral shear, withdrawal, and head pull-through strength testing in accordance with ASTM D1761

10.1.8 Connection design value calculations by DrJ Engineering, LLC in accordance with AWC TR12 and accepted engineering practices

10.1.9 Post-installed adhesive anchors in accordance with ACI 355.4 and ACI 318 from an approved source

10.2 Information contained herein may include the result of testing and/or data analysis by sources that are approved agencies, approved sources, and/or an RDP. Accuracy of external test data and resulting analysis is relied upon.

Information contained in this report was developed using report holder's confidential intellectual property (IP) and trade secrets (TS), which is protected by Defend Trade Secrets Act 2016, © DrJ Engineering, LLC

10.3 Where applicable, testing and/or engineering analysis are based upon provisions that have been codified into law through state or local adoption of regulations and standards. The developers of these regulations and standards are responsible for the reliability of published content. DrJ's engineering practice may use a regulation-adopted provision as the control. A regulation-endorsed control versus a simulation of the conditions of application to occur establishes a new material as being equivalent to the regulatory provision in terms of quality, strength, effectiveness, fire resistance, durability, and safety.

10.4 The accuracy of the provisions provided herein may be reliant upon the published properties of raw materials, which are defined by the grade mark, grade stamp, mill certificate, or duly authenticated reports from approved agencies and/or approved sources provided by the supplier. These are presumed to be minimum properties and relied upon to be accurate. The reliability of DrJ's engineering practice, as contained in this duly authenticated report, may be dependent upon published design properties by others.

10.5 *Testing and Engineering Analysis*

10.5.1 The strength, rigidity, and/or general performance of component parts and/or the integrated structure are determined by suitable tests that simulate the actual conditions of application that occur and/or by accepted engineering practice and experience.[36]

10.6 Where additional condition of use and/or regulatory compliance information is required, please search for QTS on the DrJ Certification website.

11 Findings

11.1 As outlined in **Section 6**, QTS, Quick Connectors, QuickTie Screws, and QuickTie Adhesives have performance characteristics that were tested and/or meet applicable regulations. In addition, they are suitable for use pursuant to their specified purpose.

11.2 When used and installed in accordance with this duly authenticated report and the manufacturer installation instructions, QTS, Quick Connectors, QuickTie Screws, and QuickTie Adhesives shall be approved for the following applications:

11.2.1 QTS and Quick Connectors are approved for use in Seismic Design Categories A through F.

11.2.2 Connection of ledger boards to wall studs is approved with zero, one, or two layers of $^5/_8$" GWB between the ledger and wall studs.

11.3 Unless exempt by state statute, when QTS, Quick Connectors, QuickTie Screws, and QuickTie Adhesives are to be used as a structural and/or building envelope component in the design of a specific building, the design shall be performed by an RDP.

11.4 Any application specific issues not addressed herein can be engineered by an RDP. Assistance with engineering is available from QuickTie Products, Inc.

11.5 IBC Section 104.2.3[37] (IRC Section R104.2.2[38] and IFC Section 104.2.3[39] are similar) in pertinent part state:

> **104.2.3 Alternative Materials, Design and Methods of Construction and Equipment.** The provisions of this code are not intended to prevent the installation of any material or to prohibit any design or method of construction not specifically prescribed by this code, provided that any such alternative is not specifically prohibited by this code and has been approved.

11.6 **Approved:**[40] Building regulations require that the building official shall accept duly authenticated reports.[41]

11.6.1 An approved agency is *"approved"* when it is ANAB ISO/IEC 17065 accredited.

11.6.2 An approved source is *"approved"* when an RDP is properly licensed to transact engineering commerce.

11.6.3 Federal law, Title 18 US Code Section 242, requires that, where the alternative product, material, service, design, assembly, and/or method of construction is not approved, the building official shall respond in writing, stating the reasons why the alternative was not approved. Denial without written reason deprives a protected right to free and fair competition in the marketplace.

Information contained in this report was developed using report holder's confidential intellectual property (IP) and trade secrets (TS), which is protected by Defend Trade Secrets Act 2016, © DrJ Engineering, LLC

11.7 DrJ is a licensed engineering company, employs licensed RDPs and is an ANAB Accredited Product Certification Body – Accreditation #1131.

11.8 Through the IAF Multilateral Arrangement (MLA), this duly authenticated report can be used to obtain product approval in any jurisdiction or country because all ANAB ISO/IEC 17065 duly authenticated reports are equivalent.[42]

12 Conditions of Use

12.1 As defined in **Section 6**, where material and/or engineering mechanics properties are created for load resisting design purposes, the resistance to the applied load shall not exceed the ability of the defined properties to resist those loads using the principles of accepted engineering practice.

12.2 Structural framing members (e.g., wood, masonry, concrete, steel, etc.) connected with the QTS and Quick Connectors shall be designed in accordance with the requirements of their specific design standards/ specifications as referenced in the building code adopted by the jurisdiction in which the project is to be constructed.

12.3 Each QTS and/or Quick Connector shipment shall contain the manufacturer installation instructions. A copy of the installation instructions must be available at the jobsite at all times during installation.

12.4 The QTS, Quick Connectors, QuickTie Screws, and QuickTie Adhesives shall be installed by contractors trained and certified by QuickTie Products, Inc.

12.5 Each QTS and Quick Connector that are exposed directly to weather or subject to salt corrosion in coastal areas as determined by the local building official, shall be protected in accordance with the building code adopted by the jurisdiction in which the project is to be constructed.

12.6 QuickTie screws are approved for use in wood members in both dry and wet service conditions. All applicable adjustment factors specified in NDS Table 11.3.1 shall be applied.

12.7 When installed in preservative-treated wood or fire-retardant treated wood, connections using QuickTie screws shall be designed using the treatment manufacturer reductions for connections.

12.8 Use of QuickTie screws in locations exposed to saltwater or saltwater spray is outside the scope of this evaluation.

12.9 For conditions not covered in this report, connections shall be designed in accordance with generally accepted engineering practices. When the capacity of a connection is controlled by fastener metal strength rather than wood strength, the metal strength shall not be increased by the adjustment factors specified in the NDS.

12.10 When required by adopted legislation and enforced by the building official, also known as the Authority Having Jurisdiction (AHJ) in which the project is to be constructed:

12.10.1 Any calculations incorporated into the construction documents shall conform to accepted engineering practice and, when prepared by an approved source, shall be approved when signed and sealed.

12.10.2 This report and the installation instructions shall be submitted at the time of permit application.

12.10.3 These innovative products have an internal quality control program and a third-party quality assurance program.

12.10.4 At a minimum, these innovative products shall be installed per **Section 9**.

12.10.5 The review of this report by the AHJ shall comply with IBC Section 104.2.3.2 and IBC Section 105.3.1.

12.10.6 These innovative products have an internal quality control program and a third party quality assurance program in accordance with IBC Section 104.7.2, IBC Section 110.4, IBC Section 1703, IRC Section R104.7.2, and IRC Section R109.2.

12.10.7 The application of these innovative products in the context of this report is dependent upon the accuracy of the construction documents, implementation of installation instructions, inspection as required by IBC Section 110.3, IRC Section R109.2, and any other regulatory requirements that may apply.

Information contained in this report was developed using report holder's confidential intellectual property (IP) and trade secrets (TS), which is protected by Defend Trade Secrets Act 2016, © DrJ Engineering, LLC

12.11 The approval of this report by the AHJ shall comply with IBC Section 1707.1, where legislation states in part, *"the building official shall make, or cause to be made, the necessary tests and investigations; or the building official shall accept duly authenticated reports from approved agencies in respect to the quality and manner of use of new materials or assemblies as provided for in Section 104.2.3"*, all of IBC Section 104, and IBC Section 105.3.

12.12 Design loads shall be determined in accordance with the regulations adopted by the jurisdiction in which the project is to be constructed and/or by the building designer (i.e., owner or RDP).

12.13 The actual design, suitability, and use of this report for any particular building, is the responsibility of the owner or the authorized agent of the owner.

13 Identification

13.1 QTS, Quick Connectors, QuickTie Screws, and QuickTie Adhesives, as listed in **Section 1**, are identified by a label on the board or packaging material bearing the manufacturer name, product name, this report number, and other information to confirm code compliance.

13.2 Additional technical information can be found at quicktieproducts.com.

14 Review Schedule

14.1 This report is subject to periodic review and revision. For the latest version, visit www.drjcertification.org.

14.2 For information on the status of this report, please contact DrJ Certification.

Information contained in this report was developed using report holder's confidential intellectual property (IP) and trade secrets (TS), which is protected by Defend Trade Secrets Act 2016, © DrJ Engineering, LLC

Appendix A. General Notes for Tables

1. Allowable loads are in pounds.
2. Unless noted otherwise, nails are common wire nails of the pennyweight noted in the tables. Nails shall comply with ASTM F1667 and shall have the following minimum bending yield strengths, F_{yb}.

$$8d, D = 0.131\ in., F_{yb} = 100{,}000\ psi$$

$$10d, D = 0.148\ in., F_{yb} = 90{,}000\ psi$$

$$16d, D = 0.162\ in., F_{yb} = 90{,}000\ psi$$

3. Nails designated as 8d x $1^1/_2$" are assumed to be 0.131" x 1.5" nails, nails designated as 8d are assumed to be 0.131" x 2.5" nails, nails designated as 10d x $1^1/_2$" are assumed to be 0.148" x 1.5" nails, and nails designated as 10d are assumed to be 0.148" x 3" nails. The number of fasteners shown is the minimum required to achieve the loads shown.
4. Tabulated allowable loads listed for a load duration factor of 1.00 (i.e., *"Normal"* load duration) are to be used in applications in which the shortest load duration in the combination of loads is 10 years. These values may be increased for applications in which the governing load duration factor is 1.15 or 1.25 in accordance with NDS up to the tabulated allowable loads for load duration factors of 1.33 and 1.60 or in accordance with the building code adopted by the jurisdiction in which the project is to be constructed.
5. The allowable loads included in this report are for QuickTie Connectors only. All framing members shall be designed in accordance with the building code adopted by the jurisdiction in which the project is to be constructed.
6. Load capacities in the design tables are valid for the species shown. For other species, adjust values in accordance with the NDS.
7. Unless indicated otherwise, the allowable loads provided in these tables assume the connector is attached to a wood member with a minimum nominal thickness of 2".
8. Allowable simultaneous loads in more than one direction on a single connector must be evaluated using the following equation:

$$\frac{Design\ Load\ Uplift}{Allowable\ Load\ Uplift} + \frac{Design\ Load\ Parallel\ to\ Wall\ Plate}{Allowable\ Load\ Parallel\ to\ Wall\ Plate} + \frac{Design\ Load\ Perpendicular\ to\ Wall\ Plate}{Allowable\ Load\ Perpendicular\ to\ Wall\ Plate} \leq 1.0$$

9. The building designer is responsible for determining the simultaneous loading conditions.
10. When cross-grain bending or cross-grain tension cannot be avoided in the members, mechanical reinforcement to resist such forces should be considered.

Information contained in this report was developed using report holder's confidential intellectual property (IP) and trade secrets (TS), which is protected by Defend Trade Secrets Act 2016, © DrJ Engineering, LLC

Appendix B.
ASCE/SEI 19 Section 2 Contract Documents and Shop Drawings

2.1. Contract Documents

2.1.1 Contract drawings. The Contract Drawings shall indicate the horizontal and vertical location of the cables and their connections for a specified load and temperature, typically the final dead load condition at the ambient temperature. Dimensions and loading data shall be shown to enable the computation of cable lengths under the specified condition. Required pre-stressing at erection shall be shown.

Terminations, fittings, anchorages, and other support details shall be fully detailed or sufficient data shall be provided to enable their selection and procurement. The required camber of supporting structural members and the required initial out-of-plumb of columns shall be shown on the drawings. The erection procedure modeled in the structural analysis and design shall be outlined in the contract documents with a statement indicating whether it is a suggested procedure or is mandatory because of controlling loadings or displacements of the cables or the supporting structure.

2.1.2 Contract specifications. For each cable in the proposed cable structure, the Contract Specifications shall indicate the diameter (size), the type of cable, the wire coating, the grade of cable, pre-stretching requirements and the applicable material or testing specification. If there are additional design requirements for cables, they shall be included in the contract specifications. The required tension on the cables when length and diameter measurements are made shall be indicated. Cable and fitting manufacturing tolerances required for design or erection conditions shall also be given. The Construction Documents shall also state the erection tolerances, both for the final geometry of the system and the pre-stressing forces. The Contract Specifications shall identify all other required submittals, including shop drawings and test reports.

2.2 Shop Drawings

Drawings for the fabrication of cables and fittings shall reflect the requirements indicated in the Contract Documents. Exact locations, material, sizes, and lengths of all cables and fittings shall be shown, as well as fabrication and preparation procedures for cables and fittings. Where approved substitutions or changes from the contract documents are made, an alternate member or fitting shall be detailed, that will satisfy the loading and configurations indicated in the Contract Documents

As part of the Shop Drawings, Separate erection drawings shall be prepared to show the critical sequence, procedures, and methods of erection. The Erection Drawings shall be accompanied by an erection analysis; see section 3.4.5.

Shop Drawings and test reports shall be submitted to the Engineer for review.

3.4.5 Erection Analysis

A structural analysis shall be performed for the suggested or mandatory erection procedure considering the effects listed in section 3.4.1. Should deviations be made in the suggested erection procedure, the erector shall have an independent professional engineer experienced in cable-system erection perform an erection analysis to match the revised methods, equipment, and sequence.

Information contained in this report was developed using report holder's confidential intellectual property (IP) and trade secrets (TS), which is protected by Defend Trade Secrets Act 2016, © DrJ Engineering, LLC

Appendix C. Design Loads for QTB(L) and QTG(L)

For uplift resistance, on-center spacing, allowable loads, and design notes are provided in **Table 54** and **Figure 85** for the QTB(L) Blue $^{3}/_{16}$" System and the QTG(L) Green $^{1}/_{4}$" System.

Table 54. QuickTie System (QTS) Allowable Loads for Uplift Resistance[2,3,4,5,6,7]

Uplift (lbs) per Truss (Assumes Trusses at 2 ft o.c.)	QTB(L) Blue $^{3}/_{16}$" Spacing[1]	QTG(L) Green $^{1}/_{4}$" Spacing[1]
3,180	N/A	2' 0"
2,800	N/A	2' 3"
2,600	N/A	2' 5"
2,400	N/A	2' 8"
2,200	N/A	2' 11"
2,000	N/A	3' 2"
1,910	2' 0"	3' 4"
1,800	2' 1"	3' 6"
1,700	2' 3"	3' 9"
1,600	2' 5"	4' 0"
1,500	2' 7"	4' 3"
1,400	2' 9"	4' 3"
1,300	2' 11"	4' 5"
1,200	3' 2"	4' 7"
1,100	3' 6"	4' 10"
1,000	3' 10"	5' 1"
950	4' 0"	5' 2"
900	4' 3"	5' 4"
850	4' 6"	5' 6"
800	4' 9"	5' 8"
775	4' 11"	5' 9"
750	5' 1"	5' 10"
725	5' 3"	5' 11"
700	5' 5"	6' 1"
675	5' 8"	6' 2"
650	5' 11"	6' 3"
625	6' 1"	6' 5"
600	6' 4"	6' 6"
575	6' 8"	6' 8"

Information contained in this report was developed using report holder's confidential intellectual property (IP) and trade secrets (TS), which is protected by Defend Trade Secrets Act 2016, © DrJ Engineering, LLC

Table 54. QuickTie System (QTS) Allowable Loads for Uplift Resistance[2,3,4,5,6,7]

Uplift (lbs) per Truss (Assumes Trusses at 2 ft o.c.)	QTB(L) Blue $^{3}/_{16}$" Spacing[1]	QTG(L) Green $^{1}/_{4}$" Spacing[1]
550	6' 10"	6' 10"
525	7' 0"	7' 0"
500	7' 2"	7' 2"
475	7' 4"	7' 4"
450	7' 7"	7' 7"
425	7' 9"	7' 9"
≤ 400	8' 0"	8' 0"

SI: 1 in = 25.4 mm, 1 lb = 4.45 N

1. The exact location can change slightly if the maximum spacing between any two QuickTie Systems does not exceed 8' +/- 3" on either side. Therefore, an absolute maximum spacing of 8' 6" is acceptable.
2. The allowable design load with edge distance equal to or greater than $2^{1}/_{4}$": QTB(L) Blue $^{3}/_{16}$" QuickTie = 1,910 lbs. / QTG(L) Green $^{1}/_{4}$" QuickTie = 3,180 lbs.
3. Space all QTS as specified in this table for all walls subject to uplift loads.
4. All QTS shall be installed according to these specifications unless designed and certified by a registered design professional.
5. QTB(L) Blue $^{3}/_{16}$" QuickTie / QTG(L) Green $^{1}/_{4}$" QuickTie specified in this table are embedded 4" into minimum 2,500-psi concrete using QE-1 or QE-2 epoxy adhesives.
6. Loads require a minimum $^{1}/_{2}$" thick gypsum wallboard on each side of the wall fastened to studs with $1^{1}/_{2}$" long wallboard nails spaced at 6" o.c. at edges and 12" o.c. in the field.
7. Use only QTS materials as specified and supplied by QuickTie Products, Inc.

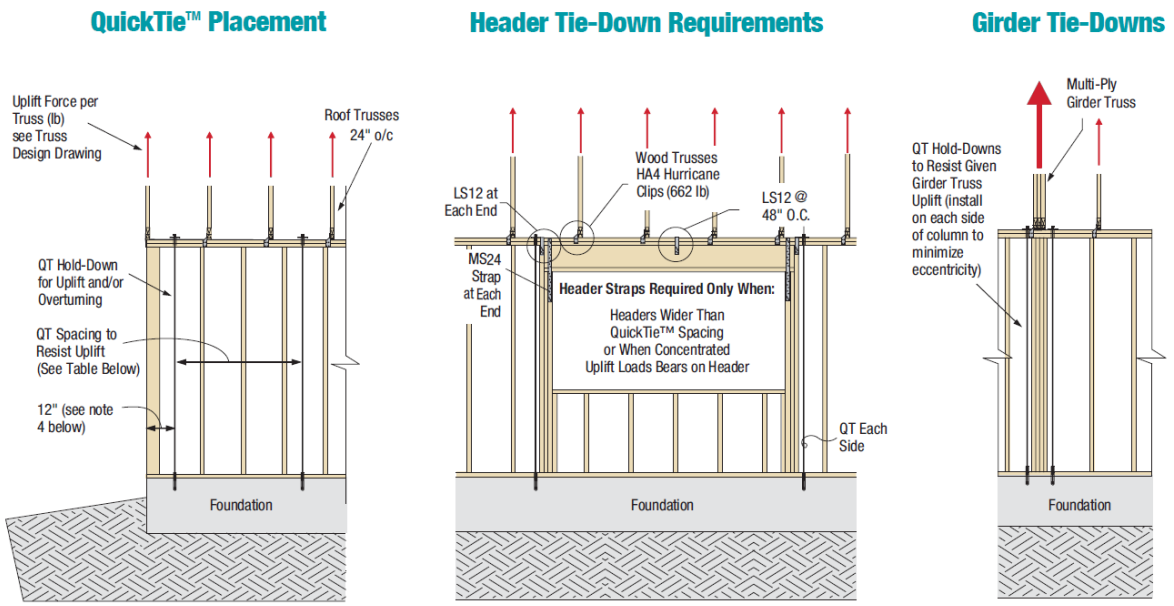

NOTES:

1. Sheathing for shear walls removed for clarity.
2. All QuickTie™ cables shall be installed according to these specifications unless designed and certified by a registered design professional.
3. Install QuickTie™ cables at each end of all shear wall segments. More than one QuickTie™ may be required to resist combined forces due to uplift and overturning.
4. Refer to Table for maximum spacing requirements for QuickTie™ cables used to resist uplifts only. Install one QuickTie™ within 12" of each load bearing corner (one side of corner, preferably the side where the top plates lap over the other wall.)
5. Allowable loads provided in this figure are for QuickTie™ System only. Building designer must verify that the wall structural framing elements are capable of transferring the loads to the QTS.
6. See header connection schedule for connections required for headers 8'-0" and greater.
7. Use only QuickTie™ System materials as supplied by Quick Tie Products, Inc.

Figure 85. QuickTie System (QTS) Allowable Loads for Uplift Resistance

Information contained in this report was developed using report holder's confidential intellectual property (IP) and trade secrets (TS), which is protected by Defend Trade Secrets Act 2016, © DrJ Engineering, LLC

Issue Date: April 4, 2021
Supplement Revision Date: July 3, 2025
Subject to Renewal: April 1, 2027

FBC Supplement to Report Number 0910-01

REPORT HOLDER: QuickTie™ Products, Inc.

1 Evaluation Subject

1.1 QuickTie System (QTS)

1.2 Quick Connectors

1.3 QuickTie Screws

1.4 QuickTie Adhesives

1.4.1 See **Section 1** of this report for detailed product listings.

2 Purpose and Scope

2.1 Purpose

2.1.1 The purpose of this Report Supplement is to show QTS, Quick Connectors, QuickTie Screws, and QuickTie Adhesives, recognized in Report Number 0910-01, have also been evaluated for compliance with the codes listed below as adopted by the Florida Building Commission.

2.2 *Applicable Code Editions*

2.2.1 *FBC-B—20, 23: Florida Building Code – Building (FL 3557 and FL 13468)*

2.2.2 *FBC-R—20, 23: Florida Building Code – Residential (FL 3557 and FL 13468)*

3 Conclusions

3.1 QTS, Quick Connectors, QuickTie Screws, and QuickTie Adhesives, described in Report Number 0910-01, comply with the FBC-B and FBC-R and are subject to the conditions of use described in this supplement.

3.2 Where there are variations between the IBC and IRC and the FBC-B and FBC-R applicable to this report, they are listed here:

3.2.1 FBC-B Section 104 is reserved.

3.2.2 FBC-B Section 110.4 is reserved and replaces IBC Section 110.4.

3.2.3 FBC-B Section 104.6 is reserved and replaces IBC Section 104.4.

3.2.4 FBC-B Section 104.11 replaces IBC Section 104.2.3 and Section 104.2.3.2.

3.2.5 FBC-B Section 105.3 replaces IBC Section 105.3.

3.2.6 FBC-B Section 105.3.1 replaces IBC Section 105.3.1.

3.2.7 FBC-B Section 110.3 replaces IBC Section 110.3.

3.2.8 FBC-B Section 1613 is reserved and replaces IBC Section 1613.

3.2.9 FBC-B Section 1707.1 replaces IBC Section 1707.1.

3.2.10 FBC-B Section 1901.3 replaces IBC Section 1901.3.

3.2.11 FBC-B Section 2304.3.1 replaces IBC Section 2304.3.1.

3.2.12 FBC-B Section 2304.10.5 replaces IBC Section 2304.10.6.

Information contained in this report was developed using report holder's confidential intellectual property (IP) and trade secrets (TS), which is protected by Defend Trade Secrets Act 2016, © DrJ Engineering, LLC

3.2.13 FBC-B Section 2304.12 replaces IBC Section 2304.12.

3.2.14 FBC-B Section 2306.1 replaces IBC Section 2306.1.

3.2.15 FBC-B Section 2306.3 replaces IBC Section 2306.3.

3.2.16 FBC-B Section 2308 is reserved and replaces IBC Section 2308 and IBC Section 2308.5.3.2.

3.2.17 FBC-R Section R104 and Section R109 are reserved.

3.2.18 FBC-R Section R301.1.3 replaces IRC Section R301.1.3.

3.2.19 FBC-R Section R301.2.1 replaces IRC Section R301.2.1.

3.2.20 FBC-R Section R301.2.2 replaces IRC Section R301.2.2.

3.2.21 FBC-R Section R317 replaces IRC Section R304.

3.2.22 FBC-R Section R317.3 replaces IRC Section R304.3.

3.2.23 FBC-R Section R403.1.6 replaces IRC Section R403.1.6.

3.2.24 FBC-R Section R602 replaces IRC Section R602.

3.2.25 FBC-R Section R602.10 is reserved and replaces IRC Section 602.10.

3.2.26 FBC-R Section R602.10.6.2 is reserved and replaces IRC Section 602.10.6.2.

3.2.27 FBC-R Section R602.3.2 is reserved and replaces IRC Section R602.3.2.

4 Conditions of Use

4.1 QTS, Quick Connectors, QuickTie Screws, and QuickTie Adhesives, described in Report Number 0910-01, must comply with all of the following conditions:

4.1.1 All applicable sections in Report Number 0910-01.

4.1.2 The design, installation, and inspections are in accordance with additional requirements of FBC-B Chapter 16 and Chapter 17, as applicable.

Information contained in this report was developed using report holder's confidential intellectual property (IP) and trade secrets (TS), which is protected by Defend Trade Secrets Act 2016, © DrJ Engineering, LLC

Notes

1 For more information, visit drjcertification.org or call us at 608-310-6748.

2 2021 IRC Section R317

3 2018 IBC Section 2304.10.5

4 2021 IRC Section R317.3

5 Capitalized terms and responsibilities are defined pursuant to the applicable building code, applicable reference standards, the latest edition of TPI 1, the NDS, AISI S202, US professional engineering law, Canadian building code, Canada professional engineering law, Qualtim External Appendix A: Definitions/Commentary, Qualtim External Appendix B: Project/Deliverables, Qualtim External Appendix C: Intellectual Property and Trade Secrets, definitions created within Design Drawings and/or definitions within Reference Sheets. Beyond this, terms not defined shall have ordinarily accepted meanings as the context implies. Words used in the present tense include the future; words stated in the masculine gender include the feminine and neuter; the singular number includes the plural and the plural, the singular.

6 https://up.codes/viewer/mississippi/ibc-2024/chapter/17/special-inspections-and-tests#1702

7 Alternative Materials, Design and Methods of Construction and Equipment: The provisions of any regulation code are not intended to prevent the installation of any material or to prohibit any design or method of construction not specifically prescribed by a regulation. Please review https://www.justice.gov/atr/mission and https://up.codes/viewer/mississippi/ibc-2024/chapter/1/scope-and-administration#104.2.3

8 https://up.codes/viewer/mississippi/ibc-2024/chapter/17/special-inspections-and-tests#1706.2:~:text=the%20design%20strengths%20and%20permissible%20stresses%20shall%20be%20established%20by%20tests

9 The design strengths and permissible stresses of any structural material shall conform to the specifications and methods of design of accepted engineering practice. https://up.codes/viewer/mississippi/ibc-2024/chapter/17/special-inspections-and-tests#1706.1:~:text=Conformance%20to%20Standards-,The%20design%20strengths%20and%20permissible%20stresses,-of%20any%20structural

10 https://up.codes/viewer/mississippi/ibc-2024/chapter/17/special-inspections-and-tests#1707.1:~:text=the%20building%20official%20shall%20make%2C%20or%20cause%20to%20be%20made%2C%20the%20necessary%20tests%20and%20investigations%3B%20or%20the%20building%20official%20shall%20accept%20duly%20authenticated%20reports%20from%20approved%20agencies%20in%20respect%20to%20the%20quality%20and%20manner%20of%20use%20of%20new%20materials%20or%20assemblies%20as%20provided%20for%20in%20Section%20104.2.3.

11 https://up.codes/viewer/mississippi/ibc-2024/chapter/17/special-inspections-and-tests#1703.4.2

12 https://up.codes/viewer/mississippi/ibc-2024/chapter/2/definitions#approved_agency

13 https://up.codes/viewer/mississippi/ibc-2024/chapter/2/definitions#approved_source

14 https://www.law.cornell.edu/uscode/text/18/1832 (b) Any organization that commits any offense described in subsection (a) shall be fined not more than the greater of $5,000,000 or 3 times the value of the stolen trade secret to the organization, including expenses for research and design and other costs of reproducing the trade secret that the organization has thereby avoided. The federal government and each state have a public records act. To follow DTSA and comply state public records and trade secret legislation requires approval through ANAB ISO/IEC 17065 accredited certification bodies or approved sources. For more information, please review this website: Intellectual Property and Trade Secrets.

15 https://www.nspe.org/resources/issues-and-advocacy/professional-policies-and-position-statements/regulation-professional AND https://apassociation.org/list-of-engineering-boards-in-each-state-archive/

16 https://www.cbitest.com/accreditation/

17 https://up.codes/viewer/mississippi/ibc-2024/chapter/1/scope-and-administration#104.1:~:text=directed%20to%20enforce%20the%20provisions%20of%20this%20code

18 https://up.codes/viewer/mississippi/ibc-2024/chapter/1/scope-and-administration#104.2.3 AND https://up.codes/viewer/mississippi/ibc-2024/chapter/1/scope-and-administration#105.3.1

19 https://up.codes/viewer/mississippi/ibc-2024/chapter/17/special-inspections-and-tests#1707.1

20 https://iaf.nu/en/about-iaf-mla/#:~:text=Once%20an%20accreditation%20body%20is%20a%20signatory%20of%20the%20IAF%20MLA%2C%20it%20is%20required%20to%20recognise%20certificates%20and%20validation%20and%20verification%20statements%20issued%20by%20conformity%20assessment%20bodies%20accredited%20by%20all%20other%20signatories%20of%20the%20IAF%20MLA%2C%20with%20the%20appropriate%20scope

21 True for all ANAB accredited product evaluation agencies and all International Trade Agreements.

22 https://www.justice.gov/crt/deprivation-rights-under-color-law AND https://www.justice.gov/atr/mission

23 Unless otherwise noted, the links referenced herein use un-amended versions of the 2024 International Code Council (ICC) 2024 International Code Council (ICC) model codes as foundation references. Mississippi versions of the IBC 2024 and the IRC 2024 are un-amended. This material, product, design, service and/or method of construction also complies with the 2000-2012 versions of the referenced codes and the standards referenced therein. As pertinent to this technical and code compliance evaluation, CBI and/or DrJ staff have reviewed any state or local regulatory amendments to assure this report is in compliance.

24 See Adoptions by Publisher for the latest adoption of a non-amended or amended model code by the local jurisdiction. https://up.codes/codes/general

25 See Adoptions by Publisher for the latest adoption of a non-amended or amended model code by state. https://up.codes/codes/general

26 https://www.ecfr.gov/current/title-24/subtitle-B/chapter-XX/part-3282/subpart-A/section-3282.14

27 https://www.ecfr.gov/current/title-24/subtitle-B/chapter-XX/part-3280

28 All references to the FBC-B and FBC-R are the same as the 2024 IBC and 2024 IRC respectively, unless otherwise noted in the Florida Supplement at the end of this report.

29 https://www.ecfr.gov/current/title-24/subtitle-B/chapter-XX/part-3280#p-3280.2(Listed%20or%20certified); https://up.codes/viewer/mississippi/ibc-2024/chapter/2/definitions#listed AND https://up.codes/viewer/mississippi/ibc-2024/chapter/2/definitions#labeled

30 2021 IBC Section 2308.5.3.2

31 https://up.codes/viewer/mississippi/ibc-2024/chapter/17/special-inspections-and-tests#1703.4

Information contained in this report was developed using report holder's confidential intellectual property (IP) and trade secrets (TS), which is protected by Defend Trade Secrets Act 2016, © DrJ Engineering, LLC

32 https://www.ecfr.gov/current/title-24/subtitle-B/chapter-XX/part-3280#:~:text=All%20construction%20methods%20shall%20be%20in%20conformance%20with%20accepted%20engineering%20practices%20to%20insure%20durable%2C%20livable%2C%20and%20safe%20housing%20and%20shall%20demonstrate%20acceptable%20workmanship%20reflecting%20journeyman%20quality%20of%20work%20of%20the%20various%20trades

33 https://www.ecfr.gov/current/title-24/subtitle-B/chapter-XX/part-3280#:~:text=The%20strength%20and%20rigidity%20of%20the%20component%20parts%20and/or%20the%20integrated%20structure%20shall%20be%20determined%20by%20engineering%20analysis%20or%20by%20suitable%20load%20tests%20to%20simulate%20the%20actual%20loads%20and%20conditions%20of%20application%20that%20occur

34 Qualification is performed by a legislatively defined Accreditation Body. ANSI National Accreditation Board (ANAB) is the largest independent accreditation body in North America and provides services in more than 75 countries. DrJ is an ANAB accredited product certification body.

35 https://anabpd.ansi.org/Accreditation/product-certification/AllDirectoryDetails?prgID=1&orgID=2125&statusID=4#:~:text=Bill%20Payment%20Date-,Accredited%20Scopes,-13%20ENVIRONMENT.%20HEALTH

36 See Code of Federal Regulations (CFR) Title 24 Subtitle B Chapter XX Part 3280 for definition: https://www.ecfr.gov/current/title-24/subtitle-B/chapter-XX/part-3280

37 2021 IBC Section 104.11

38 2021 IRC Section R104.11

39 2018: https://up.codes/viewer/wyoming/ifc-2018/chapter/1/scope-and-administration#104.9 AND 2021: https://up.codes/viewer/wyoming/ibc-2021/chapter/1/scope-and-administration#104.11

40 Approved is an adjective that modifies the noun after it. For example, Approved Agency means that the Agency is accepted officially as being suitable in a particular situation. This example conforms to IBC/IRC/IFC Section 201.4 (https://up.codes/viewer/mississippi/ibc-2024/chapter/2/definitions#201.4) where the building code authorizes sentences to have an ordinarily accepted meaning such as the context implies.

41 https://up.codes/viewer/mississippi/ibc-2024/chapter/17/special-inspections-and-tests#1707.1

42 Multilateral approval is true for all ANAB accredited product evaluation agencies and all International Trade Agreements.

Information contained in this report was developed using report holder's confidential intellectual property (IP) and trade secrets (TS), which is protected by Defend Trade Secrets Act 2016, © DrJ Engineering, LLC